PROPOSED NEW FACILITY:

SLEEP INN & SUITES

CHOICE PROPERTY I.D. # NY701

635 ELMIRA ROAD
ITHACA, NY 14850
TOWN of ITHACA, TOMKINS COUNTY

INDEX OF DRAWINGS

SHEET	DESCRIPTION	SHEET	DESCRIPTION	SHEET	DESCRIPTION
CS	COVER SHEET	A504	ENLARGED LOBBY FINISH PLAN	M101	FIRST FLOOR MECHANICAL PLAN
A101	FIRST FLOOR PLAN	A505	ENLARGED POOL FLOOR, CEILING & FURNITURE PLANS	M102	SECOND & THIRD FLOOR MECHANICAL PLAN
A102	SECOND FLOOR PLAN	A506	ENLARGED QUEEN GUEST ROOM PLANS & DETAILS	M201	EXHAUST SYSTEM PLAN - GUEST ROOMS
A103	THIRD FLOOR PLAN	A507	ENLARGED KING GUEST ROOM PLANS & DETAILS	M301	MECHANICAL SPECIFICATIONS & DETAILS
A104	ATTIC & ROOF PLANS	A508	ENLARGED H/C ACCESSIBLE ROOM PLANS & DETAILS		
A105	ENLARGED COMMON AREA FLOOR PLAN	A509	ENLARGED KING JACUZZI ROOM PLANS & DETAILS	P101	FIRST FLOOR SANITARY SEWER PLUMBING PLAN
A106	DUMPSTER ENCLOSURE	A510	INTERIOR ELEVATIONS KEY PLAN	P102	SECOND & THIRD FLOOR SANITARY SEWER PLUMBING PLANS
A201	EXTERIOR ELEVATIONS	A511	INTERIOR ELEVATIONS	P201	FIRST FLOOR DOMESTIC WATER PLUMBING PLAN
A202	EXTERIOR ELEVATIONS	A512	INTERIOR ELEVATIONS	P202	SECOND & THIRD FLOOR DOMESTIC WATER PLUMBING PLANS
A301	BUILDING SECTION & DETAILS	A513	MILLWORK DETAILS	P301	PLUMBING DETAILS & SPECIFICATIONS
A302	PORTE COCHERE SECTION & DETAILS	A514	MILLWORK DETAILS		
A303	BUILDING SECTION & DETAILS	A601	FIRST FLOOR REFLECTED CEILING PLAN	EM-1	FIRST FLOOR EMERGENCY FIXTURES PLAN
A304	SECTIONS & DETAILS	A602	SECOND & THIRD FLOOR REFLECTED CEILING PLAN	EM-2	SECOND & THIRD FLOOR EMERGENCY FIXTURES PLAN
A305	SECTIONS & DETAILS	A603	ENLARGED COMMON AREA REFLECTED CEILING PLAN		
A306	VESTIBULE SECTIONS	A701	ARCHITECTURAL SPECIFICATIONS	E101	FIRST FLOOR ELECTRICAL LIGHTING PLAN
A307	STAIR SECTIONS & DETAILS	A702	ARCHITECTURAL SPECIFICATIONS	E102	SECOND & THIRD FLOOR ELECTRICAL LIGHTING PLANS
A308	ELEVATOR SECTIONS & DETAILS			E201	FIRST FLOOR ELECTRICAL POWER PLAN
A309	TOWER SECTIONS & DETAILS			E202	SECOND & THIRD FLOOR ELECTRICAL POWER PLANS
A401	WALL TYPES, DOOR & WINDOW SCHEDULE	S101	FOUNDATION PLAN	E301	ENLARGED SUITE ELECTRICAL PLANS
A402	HANDICAP ACCESSIBLE DETAILS, NOTES	S201	FLOOR FRAMING PLANS	E401	ELECTRICAL PANELS
A403	FIRE RATED ASSEMBLY DETAILS	S301	ROOF FRAMING PLAN	E402	ELECTRICAL SPECIFICATIONS & PANEL LOAD SUMMARIES
A500	FINISH SCHEDULE	S302	ROOF TRUSS TYPES	E403	ELECTRICAL SPECS,RISER DIAGRAM, ATTIC ELEC. PLAN
A501	OVERALL & ENLARGED TYP. ROOM FURNITURE PLANS	S401	STRUCTURAL DETAILS & SPECIFICATIONS		
A502	ENLARGED LOBBY FURNITURE PLAN	S402	STRUCTURAL DETAILS	MPE1	FIRE PENETRATION DETAILS 1
A503	OVERALL & ENLARGED TYP. ROOM FINISH PLANS				

NOTE: CORPORATE SIGNAGE TO BE PROVIDED & COORDINATED BY OTHERS

ARCHITECTURAL LEGEND

MARK	DESCRIPTION
	DENOTES NEW WALL CONSTRUCTION
	DENOTES EXISTING WALLS
	DENOTES PARTIAL HEIGHT WALLS
	DENOTES NEW 1-HOUR RATED WALL
	DENOTES NEW 2-HOUR RATED WALL
	DENOTES NEW 3-HOUR RATED WALL
? 101	DENOTES ROOM NAME AND NUMBER
A	DENOTES WALL TYPES
101-1	DENOTES DOOR NUMBER
W1	DENOTES WINDOW TYPE
A A000	DENOTES EXTERIOR ELEVATION
? ?	DENOTES BUILDING / WALL SECTION
A A000	DENOTES DETAILS AND LARGE SCALE PLANS
1 2 3 4 A000	DENOTES INTERIOR ELEVATION

LEGEND OF MATERIALS

	BATT INSULATION
	BRICK
	CONCRETE
	CONCRETE BLOCK
	CRUSHED STONE
	EARTH
	FINISHED WOOD
	PLYWOOD
	RIGID INSULATION
	STEEL LARGE SCALE
I ⅃	STEEL SMALL SCALE
	WOOD BLOCKING
	WOOD ROUGH

ABBREVIATIONS

A.	ABOVE
A.F.F.	ABOVE FINISHED FLOOR
ACT.	ACOUSTICAL TILE
ADJ.	ADJUSTABLE
A.C.	AIR CONDITIONING
ALT.	ALTERNATE
ALUM.	ALUMINUM
A.B.	ANCHOR BOLT
A.R.A.	AREA OF RESCUE ASSISTANCE
@	AT
B.F.F.	BELOW FINISHED FLOOR
B.G.	BELOW GRADE
B.M.	BENCH MARK
BRG.	BRIDGING OR BEARING
BD.	BOARD
BOT. / BTM.	BOTTOM
B.O.F.	BOTTOM OF FOOTING
B.L.	BUILDING LINE
BLDG.	BUILDING
CAB.	CABINET
CPT.	CARPET
C.I.	CAST IRON
C.B.	CATCH BASIN
CLG.	CEILING
C/C	CENTER TO CENTER
	CENTER LINE
CER.	CERAMIC
C.T.	CERAMIC TILE
C.O.	CLEAN OUT
CLR.	CLEAR
CLRD.C.M.U.	COLORED CONCRETE MASONRY UNIT
COL.	COLUMN
CONC.	CONCRETE
C.M.U.	CONCRETE MASONRY UNIT
CONST.	CONSTRUCTION
CONT.	CONTINUOUS
C.J.	CONTROL JOINT
CTR.	COUNTER
CU.FT.	CUBIC FEET
C.F.M.	CUBIC FEET PER MINUTE
C/P	CUT AND PATCH
D.L.	DEAD LOAD
DK.	DECK
DTL.	DETAIL
DIA. / Ø	DIAMETER
DIM.	DIMENSION
D.W.	DISHWASHER
DIV.	DIVISION
DR.	DOOR
DN.	DOWN
D.S.	DOWN SPOUT
DWG.	DRAWING
EA.	EACH
E.W.	EACH WAY
ELEC.	ELECTRICAL
E.C.	ELECTRICAL CONTRACTOR
E.W.C.	ELECTRIC WATER COOLER
ELEV.	ELEVATION
EQ.	EQUAL
EQUIP.	EQUIPMENT
EXA.	EXHAUST AIR
EX. / EXST.	EXISTING
E/F	EXISTING TO FINISH
E/S	EXISTING TO STUD
EXP.	EXPOSED OR EXPANSION
EXT.	EXTERIOR
E.I.F.S.	EXTERIOR INSULATED FINISHING SYSTEM
E.F.S.	EXTERIOR FINISHING SYSTEM
F.R.P.	FIBERGLASS REINFORCED PANEL
FIN.	FINISH
F/F	FINISH TO FINISH
F/S	FINISH TO STUD
F.C.	FINISHED CEILING
F.F.	FINISHED FLOOR
F.G.	FINISHED GRADE
F.S.	FINISHED SLAB
F.E.	FIRE EXTINGUISHER
F.E.C.	FIRE EXTINGUISHER CABINET
F.R.	FIRE RATED
F.R.G.W.B.	FIRE RATED GYPSUM WALL BOARD
F.RET.	FIRE RETARDANT
FLEX.	FLEXIBLE
FLR.	FLOOR
F.D.	FLOOR DRAIN
FT.	FOOT OR FEET
FT./LBS.	FOOT POUNDS
FTG.	FOOTING
F.S.	FULL SIZE
GALV.	GALVANIZED
GA.	GAUGE
G.C.	GENERAL CONTRACTOR
GL.	GLASS OR GLAZING
G.F.M.U.	GROUND FACE CONCRETE MASONRY UNIT
GYP.	GYPSUM
G.W.B.	GYPSUM WALL BOARD
H/C	HANDICAP
HDWR.	HARDWARE
H.V.A.C.	HEATING, VENTILATION & AIR CONDITIONING
HGT.	HEIGHT
H.C.	HOLLOW CORE
H.C.M.	HOLLOW CORE MASONITE
H.C.W.	HOLLOW CORE WOOD
H.M.	HOLLOW METAL
HORZ.	HORIZONTAL
H.B.	HOSE BIB
I.D.	INSIDE DIAMETER
INSUL.	INSULATION OR INSULATED
INV.	INVERT
LAM.	LAMINATED
L.	LENGTH
L.L.	LONG LEG
L.S.L.	LAMINATED STRAND LUMBER
L.V.L.	LAMINATED VENEER LUMBER
M.H.	MAN HOLE
MECH.	MECHANICAL
MIR.	MIRROR
MISC.	MISCELLANEOUS
MFR.	MANUFACTURER
M.O.	MASONRY OPENING
MAT.	MATERIAL
MAX.	MAXIMUM
M.C.	MECHANICAL CONTRACTOR
M.D.F.	MEDIUM DENSITY FIBERBOARD
MTL.	METAL
M.T.	METAL THRESHOLD
MIN.	MINIMUM
MLDG.	MOLDING
M.R.	MOISTURE RESISTANT
NOM.	NOMINAL
N.I.C.	NOT IN CONTRACT
N.I.S.	NOT TO SCALE
NO.	NUMBER
O.A.	OUTSIDE AIR
O.C.	ON CENTER
OPNG.	OPENING
O.W.	OPEN WEB
OPP.	OPPOSITE
O.S.B.	ORIENTED STRAND BOARD
O.D.	OUTSIDE DIAMETER
P.E.M.B.	PRE-ENGINEERED METAL BUILDING
PNT. / PNT'D.	PAINT / PAINTED
PLAS.	PLASTER
P.LAM	PLASTIC LAMINATE
PL.	PLATE
P.C.	PLUMBING CONTRACTOR
P.V.C.	POLYVINYL CHLORIDE
P.S.I.	POUNDS PER SQUARE INCH
P.T.	PRESSURE TREATED
P.S.F.	POUNDS PER SQUARE FOOT
Q.T.	QUARRY TILE
R.	RADIUS
R.C.P.	REFLECTED CEILING PLAN
REF.	REFRIGERATOR
REINF.	REINFORCING
REQ. / REQ'D	REQUIRE / REQUIRED
RQMTS.	REQUIREMENTS
R.A.	RETURN AIR
RM.	ROOM
R.C.	ROUGH CUT
R.O.	ROUGH OPENING
SECT.	SECTION
SCH.	SCHEDULE
SIM.	SIMILAR
S.A.	SUPPLY AIR
S.C.	SOLID CORE
S.C.W.	SOLID CORE WOOD
SPEC.	SPECIFICATION
S.B.	SPLASH BLOCK
S.F.C.M.U.	SPLIT-FACE CONCRETE MASONRY UNIT
S.F. / SQ.FT.	SQUARE FOOT
S.S.	STAINLESS STEEL
STD.	STANDARD
STL.	STEEL
STRUCT.	STRUCTURAL
S/S	STUD TO STUD
SYS.	SYSTEM
TEMP.	TEMPERED OR TEMPERATURE
TH.	THICK OR THICKNESS
T&G	TONGUE AND GROOVE
T.B.D.	TO BE DETERMINED
T.O.F.	TOP OF FOOTING
T.O.M.	TOP OF MASONRY
T.O.P.	TOP OF PLATE
T.O.S.	TOP OF STEEL
TYP.	TYPICAL
U.N.O.	UNLESS NOTED OTHERWISE
V.B.	VAPOR BARRIER
VAR.	VARIES
V.T.R.	VENT THROUGH ROOF
VERT.	VERTICAL
V.I.F.	VERIFY IN FIELD
VEST.	VESTIBULE
V.C.W.	VINYL CLAD WOOD
V.C.T.	VINYL COMPOSITION TILE
V.C.B.	VINYL COVE BASE
W.C.O.	WALL CLEAN OUT
W.C.	WATER CLOSET
W.W.F.	WELDED WIRE FABRIC
W.	WIDTH
WIN.	WINDOW
w/	WITH
w/o	WITHOUT
WD.	WOOD
W.I.	WROUGHT IRON

CODE COMPLIANCE INFORMATION

APPLICABLE CODES: UNIFORM CONSTRUCTION CODE, 2016 NEW YORK UNIFORM CODE SUPPLEMENT, 2015 INTERNATIONAL BUILDING CODE, 2015 INTERNATIONAL ENERGY CONSERVATION CODE, 2016 SUPPLEMENT TO THE NEW YORK STATE ENERGY CONSERVATION CONSTRUCTION CODE, ICC/ANSI A117.1-2009, 2015 INTERNATIONAL PLUMBING CODE, 2015 INTERNATIONAL MECHANICAL CODE, 2014 (NEC) NATIONAL ELECTRICAL CODE

SECTION 302	OCCUPANCY CLASSIFICATION:	R1 - HOTEL	
SECTION 602	CONSTRUCTION TYPE:	TYPE 5B - WOOD FRAME	
TABLE 504.3	HEIGHT:	ALLOWED: 60'-0" W/ SPRINKLER SYSTEM	PROVIDED: 54'-0" (SIGN TOWER)
TABLE 504.4	NUMBER OF STORIES:	ALLOWED: 3 STORY W/ SPRINKLER SYSTEM	PROVIDED: 3 STORY
TABLE 506.2	AREA:	ALLOWED: 21,000 S.F. (SM) SPRINKLER SYSTEM	PROVIDED: 12,464 S.F. (FOOTPRINT)
TABLE 1004.1.2	OCCUPANCY LOAD: RESIDENTIAL (200 GROSS)	1ST FLOOR: 3,142 S.F. / 200 = 16 PERSONS 2ND FLOOR: 9,393 S.F. / 200 = 47 PERSONS 3RD FLOOR: 9,393 S.F. / 200 = 47 PERSONS	TOTAL = 118 PERSONS
	BUSINESS OFFICE (100 GROSS)	1ST FLOOR OFFICE: 790 S.F. / 100 = 8 PERSONS	
FIRE RESISTANCE RATED CONSTRUCTION:			
TABLE 602	FIRE SEPARATION DISTANCE:	>/= 30'-0"	
	TYPES OF CONSTRUCTION:	ALL	
TABLE 601	FIRE RESISTANCE RATING REQUIREMENTS:	TYPE 5-B	
	STRUCTURAL FRAME:	0-HOUR	
	BEARING WALLS EXTERIOR:	0-HOUR	
	BEARING WALLS INTERIOR:	0-HOUR	
	NON-BEARING WALLS EXTERIOR:	0-HOUR	
	NON-BEARING WALLS INTERIOR:	0-HOUR	
	FLOOR CONSTRUCTION:	0-HOUR	
	ROOF CONSTRUCTION:	0-HOUR	
SECTION 707	FIRE BARRIERS:		
	SHAFT ENCLOSURES (707.3.1):	(SECTION 713.4)	1-HR. RATED (LESS THAN 4 STORIES)
	EXIT ENCLOSURES (707.3.3):	(SECTION 713.4)	1-HR. RATED (LESS THAN 4 STORIES)
	EXIT PASSAGEWAYS (707.3.4):	(SECTION 1024.3)	1-HR. RATED
	HORIZONTAL EXITS (707.3.5):	(SECTION 1026.1)	NOT APPLICABLE
SECTION 708	FIRE PARTITIONS:	(TABLE 707.3.9)	REQUIRED
SECTION 1020	CORRIDORS:	(TABLE 1020.1)	1/2 HR. WITH SPRINKLER SYSTEM
CHAPTER 9	FIRE PROTECTION:		
	AUTOMATIC SPRINKLER SYSTEM:	(SECTION 903)	REQUIRED (SECTION 903.2.8)
	FIRE ALARM & DETECTION SYSTEM:	(SECTION 907)	PROVIDE FIRE PANEL, PULL STATION AND ANNUNCIATOR LOCATED BY FIRE DEPARTMENT-INTERFACE WITH SPRINKLER SYSTEM FLOW SWITCH
	SMOKE CONTROL SYSTEM:	(SECTION 909)	NOT REQUIRED
SECTION 718	CONCEALED SPACES:		
	CONCEALED WALL SPACES:	(SECTION 718.2.2)	HORZ. WALL CAVITIES 10'-0" MAX. (SEE BUILDING SECTIONS FOR LOCATIONS)
	DRAFT STOPPING:		
	FLOORS:	(SECTION 718.3)	NOT REQUIRED W/ SPRINKLER SYSTEM
	ATTIC SPACES:	(SECTION 718.4)	NOT REQUIRED W/ SPRINKLER SYSTEM
SECTION 906	FIRE EXTINGUISHERS:	TYPE 2A EVERY 3,000 SF & DURING CONSTRUCTION	

NOTE: BUILDING IS FULLY PROTECTED BY AN AUTOMATIC FIRE SUPPRESSION SYSTEM

LOCATION MAP

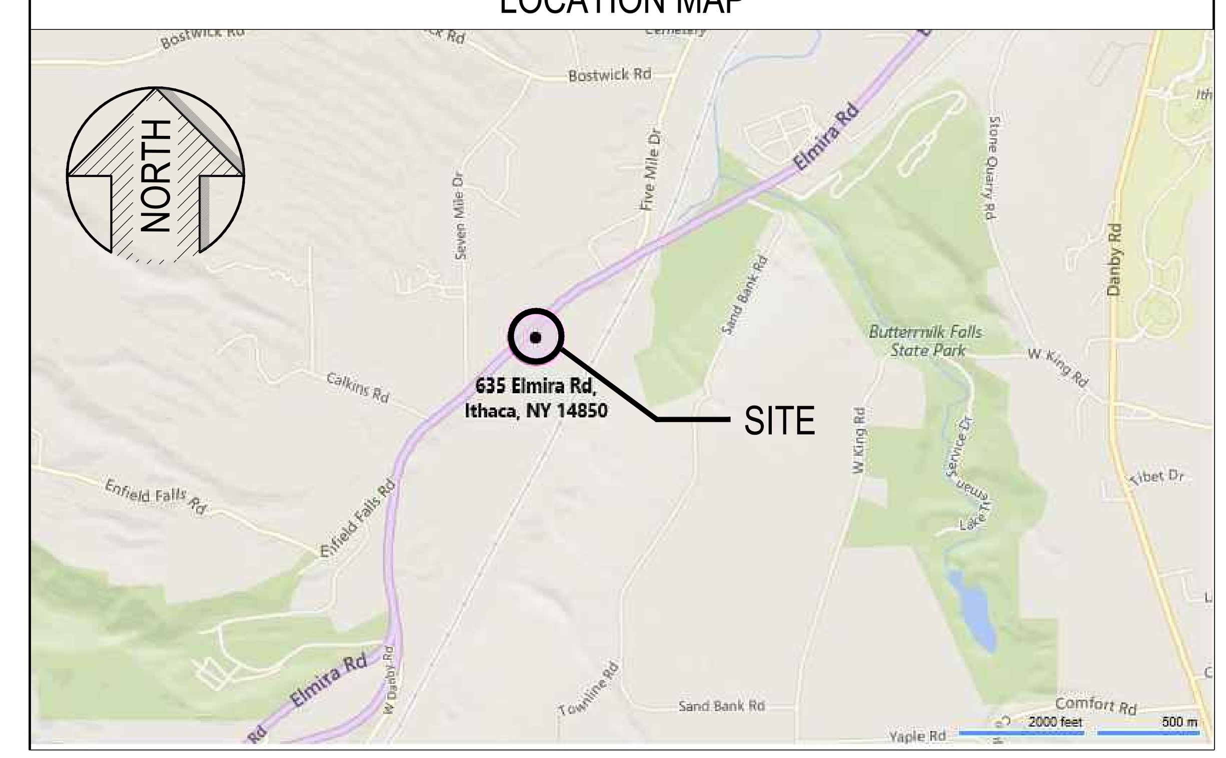

HEX 9 ARCHITECTS
ARCHITECTURE PLANNING
An LLC Company
5427 Woodside Drive
Gap, PA 17527
(717) 442-9034
(717) 283-0097 fx
JOSEPH TURNOWCHYK, AIA, NCARB
STATE OF NEW YORK REGISTRATION # 036357-1

ALL CONTRACTORS ARE TO VERIFY ALL DIMENSIONS, FIELD CONDITIONS AND THE WORK OF OTHER TRADES BEFORE PROCEEDING WITH THEIR WORK.

This drawing is the exclusive property of HEX 9 ARCHITECTS and may not be reproduced in any form without written authorization from HEX 9 ARCHITECTS. Unauthorized reproduction or use of any or all parts of this drawing will constitute a violation of U.S. copyright laws.

COPYRIGHT © 2018 HEX 9 ARCHITECTS ALL RIGHTS RESERVED

REVISIONS

NUMBER	DATE	REVISED BY
1	6-01-2018	RN

DATE	FEBRUARY 6, 2018
DRAWN BY	CMT
PROJECT NUMBER	16114

NEW FACILITY FOR:
SLEEP INN & SUITES
CHOICE PROPERTY I.D. # NY701
635 ELMIRA ROAD
ITHACA, NEW YORK 14850

COVER SHEET

CS
DRAWING NUMBER

FINAL DRAWINGS

I:\2016\16114 SLEEP INN - ITHACA, NY\PRODUCTION\0-CS.DWG 05-31-18 10:02 AM PRINTED BY: USER06

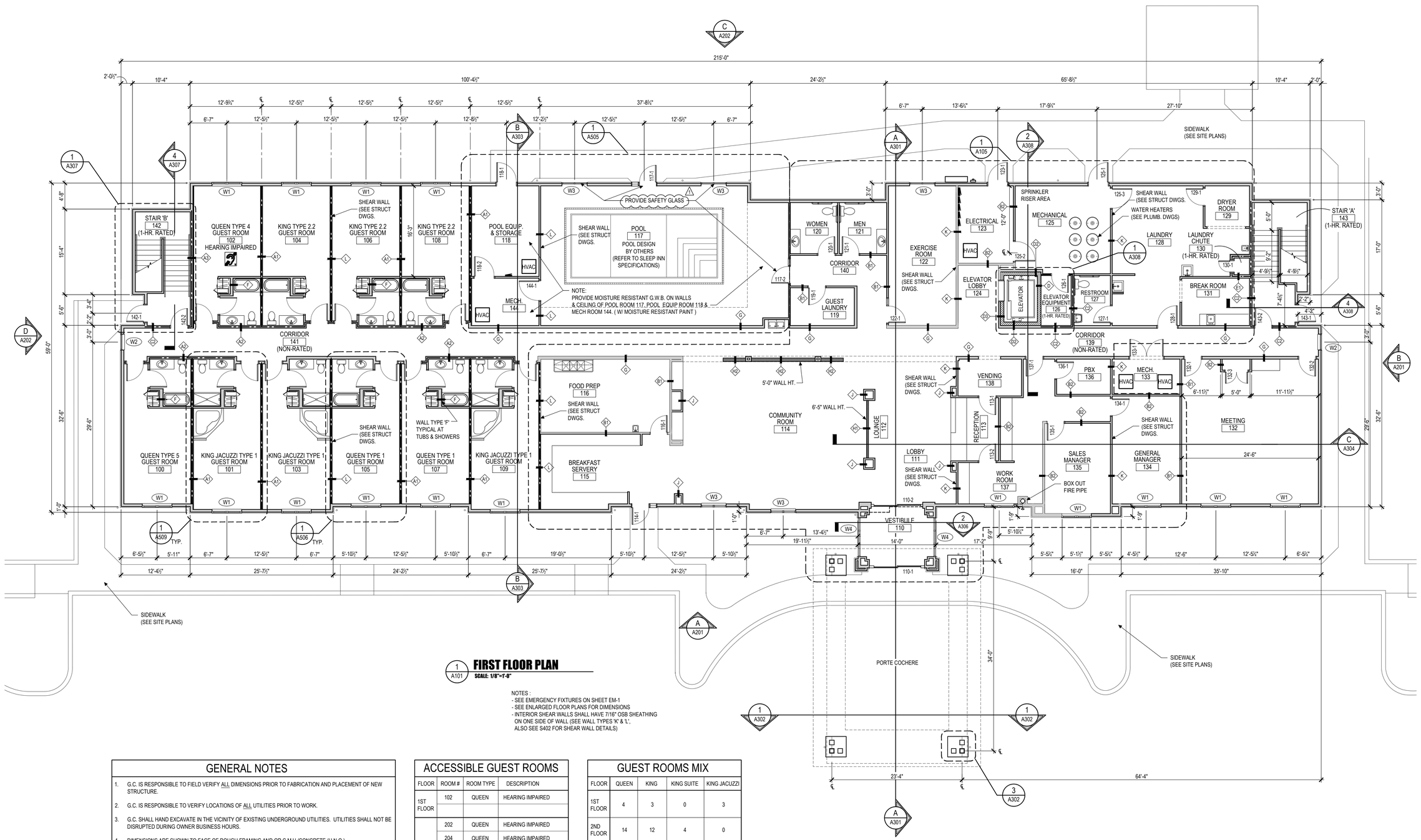

1 A101 FIRST FLOOR PLAN

SCALE: 1/8"=1'-0"

NOTES :
- SEE EMERGENCY FIXTURES ON SHEET EM-1
- SEE ENLARGED FLOOR PLANS FOR DIMENSIONS
- INTERIOR SHEAR WALLS SHALL HAVE 7/16" OSB SHEATHING ON ONE SIDE OF WALL (SEE WALL TYPES 'K' & 'L', ALSO SEE S402 FOR SHEAR WALL DETAILS)

GENERAL NOTES

1. G.C. IS RESPONSIBLE TO FIELD VERIFY ALL DIMENSIONS PRIOR TO FABRICATION AND PLACEMENT OF NEW STRUCTURE.
2. G.C. IS RESPONSIBLE TO VERIFY LOCATIONS OF ALL UTILITIES PRIOR TO WORK.
3. G.C. SHALL HAND EXCAVATE IN THE VICINITY OF EXISTING UNDERGROUND UTILITIES. UTILITIES SHALL NOT BE DISRUPTED DURING OWNER BUSINESS HOURS.
4. DIMENSIONS ARE SHOWN TO FACE OF ROUGH FRAMING AND OR C.M.U./CONCRETE (U.N.O.)
5. PROVIDE ANY REQUIRED BLOCKING FOR ALL TOILET ACCESSORIES, HANDICAP HARDWARE, MECHANICAL, ELECTRICAL, PLUMBING ITEMS AND MILLWORK, WHERE REQUIRED.
6. FINISH GRADE TO SLOPE AWAY FROM BUILDING.
7. PROVIDE PRESSURE TREATED PLATES WHERE WOOD CONTACTS CONCRETE AND/OR MASONRY. (TYP.)

ACCESSIBLE GUEST ROOMS

FLOOR	ROOM #	ROOM TYPE	DESCRIPTION
1ST FLOOR	102	QUEEN	HEARING IMPAIRED
2ND FLOOR	202	QUEEN	HEARING IMPAIRED
	204	QUEEN	HEARING IMPAIRED
	223	KING	H/C ACCESSIBLE W/ ROLL IN SHOWER
	225	KING SUITE	HEARING IMPAIRED
	226	KING SUITE	H/C ACCESSIBLE
3RD FLOOR	307	KING SUITE	HEARING IMPAIRED
	314	KING	HEARING IMPAIRED
	323	KING	H/C ACCESSIBLE & HEARING IMPAIRED
	326	QUEEN	H/C ACCESSIBLE

GUEST ROOMS MIX

FLOOR	QUEEN	KING	KING SUITE	KING JACUZZI
1ST FLOOR	4	3	0	3
2ND FLOOR	14	12	4	0
3RD FLOOR	16	10	4	0
TOTALS:	34	25	8	3

70 ROOMS TOTAL

NOTE: SEE ACCESSIBLE GUEST ROOM CHART FOR LOCATIONS

FINAL DRAWINGS

HEX 9 ARCHITECTS
5427 Woodside Drive
Gap, PA 17527
(717) 442-9094
(717) 283-0097 fx
An LLC Company
JOSEPH TURNOWCHYK, AIA, NCARB

STATE OF NEW YORK REGISTRATION # 036357-1

ALL CONTRACTORS ARE TO VERIFY ALL DIMENSIONS, FIELD CONDITIONS AND THE WORK OF OTHER TRADES BEFORE PROCEEDING WITH THEIR WORK.

This drawing is the exclusive property of HEX 9 ARCHITECTS and may not be reproduced in any form without written authorization from HEX 9 ARCHITECTS. Unauthorized reproduction or use of any or all parts of this drawing will constitute a violation of U.S. copyright laws.

COPYRIGHT © 2018 - HEX 9 ARCHITECTS - ALL RIGHTS RESERVED

REVISIONS

NUMBER	DATE	REVISED BY
1	6-01-2018	RN

DATE FEBRUARY 6, 2018
DRAWN BY CMT
PROJECT NUMBER 16114

NEW FACILITY FOR:
SLEEP INN & SUITES CHOICE PROPERTY I.D. # NY701
635 ELMIRA ROAD
ITHACA, NEW YORK 14850

FIRST FLOOR PLAN

A101
DRAWING NUMBER

D:\16114 SLEEP INN, ITHACA, NY\PRODUCTION\A101 FIRST FLOOR.DWG 6/5/2018 10:02:52 AM PRINTED BY: USER06

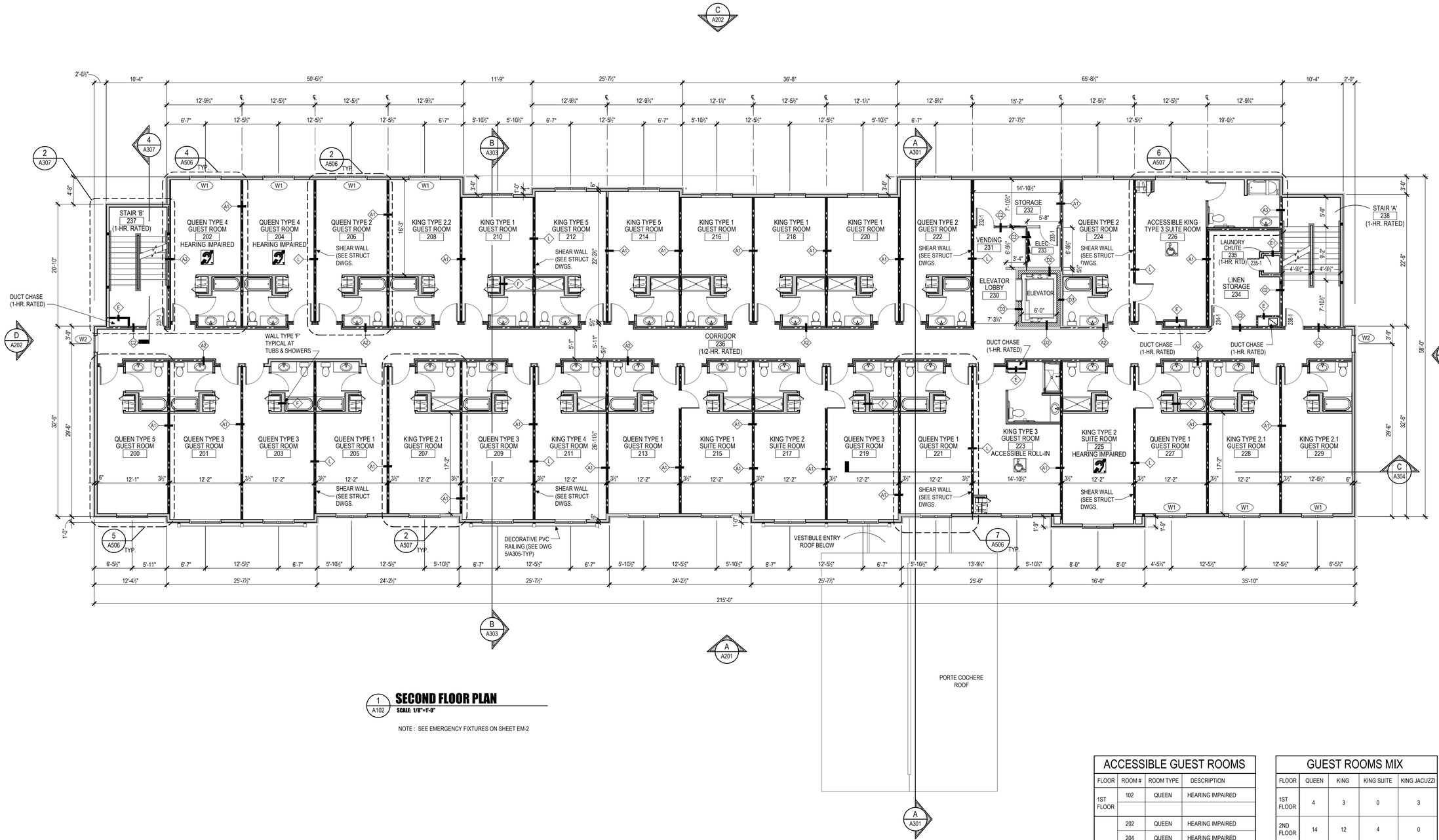

1 A102 SECOND FLOOR PLAN

SCALE: 1/8"=1'-0"

NOTE : SEE EMERGENCY FIXTURES ON SHEET EM-2

ACCESSIBLE GUEST ROOMS

FLOOR	ROOM #	ROOM TYPE	DESCRIPTION
1ST FLOOR	102	QUEEN	HEARING IMPAIRED
2ND FLOOR	202	QUEEN	HEARING IMPAIRED
	204	QUEEN	HEARING IMPAIRED
	223	KING	H/C ACCESSIBLE W/ ROLL IN SHOWER
	225	KING SUITE	HEARING IMPAIRED
	226	KING SUITE	H/C ACCESSIBLE
3RD FLOOR	307	KING SUITE	HEARING IMPAIRED
	314	KING	HEARING IMPAIRED
	323	KING	H/C ACCESSIBLE & HEARING IMPAIRED
	326	QUEEN	H/C ACCESSIBLE

GUEST ROOMS MIX

FLOOR	QUEEN	KING	KING SUITE	KING JACUZZI
1ST FLOOR	4	3	0	3
2ND FLOOR	14	12	4	0
3RD FLOOR	16	10	4	0
TOTALS:	34	25	8	3
70 ROOMS TOTAL				

NOTE: SEE ACCESSIBLE GUEST ROOM CHART FOR LOCATIONS

FINAL DRAWINGS

HEX 9 ARCHITECTS
An LLC Company
5427 Woodside Drive
Gap, PA 17527
(717) 442-9034
(717) 283-0097 fx
JOSEPH TURNOWCHYK, AIA, NCARB

STATE OF NEW YORK REGISTRATION # 036357-1

ALL CONTRACTORS ARE TO VERIFY ALL DIMENSIONS, FIELD CONDITIONS AND THE WORK OF OTHER TRADES BEFORE PROCEEDING WITH THEIR WORK.

This drawing is the exclusive property of HEX 9 ARCHITECTS and may not be reproduced in any form without written authorization from HEX 9 ARCHITECTS. Unauthorized reproduction or use of any or all parts of this drawing will constitute a violation of U.S. copyright laws.

COPYRIGHT © 2018 HEX 9 ARCHITECTS ALL RIGHTS RESERVED

REVISIONS

NUMBER	DATE	REVISED BY

DATE	FEBRUARY 6, 2018
DRAWN BY	CMT
PROJECT NUMBER	16114

NEW FACILITY FOR:
SLEEP INN & SUITES
635 ELMIRA ROAD
ITHACA, NEW YORK 14850

CHOICE PROPERTY I.D. # NY701

SECOND FLOOR PLAN

A102

DRAWING NUMBER

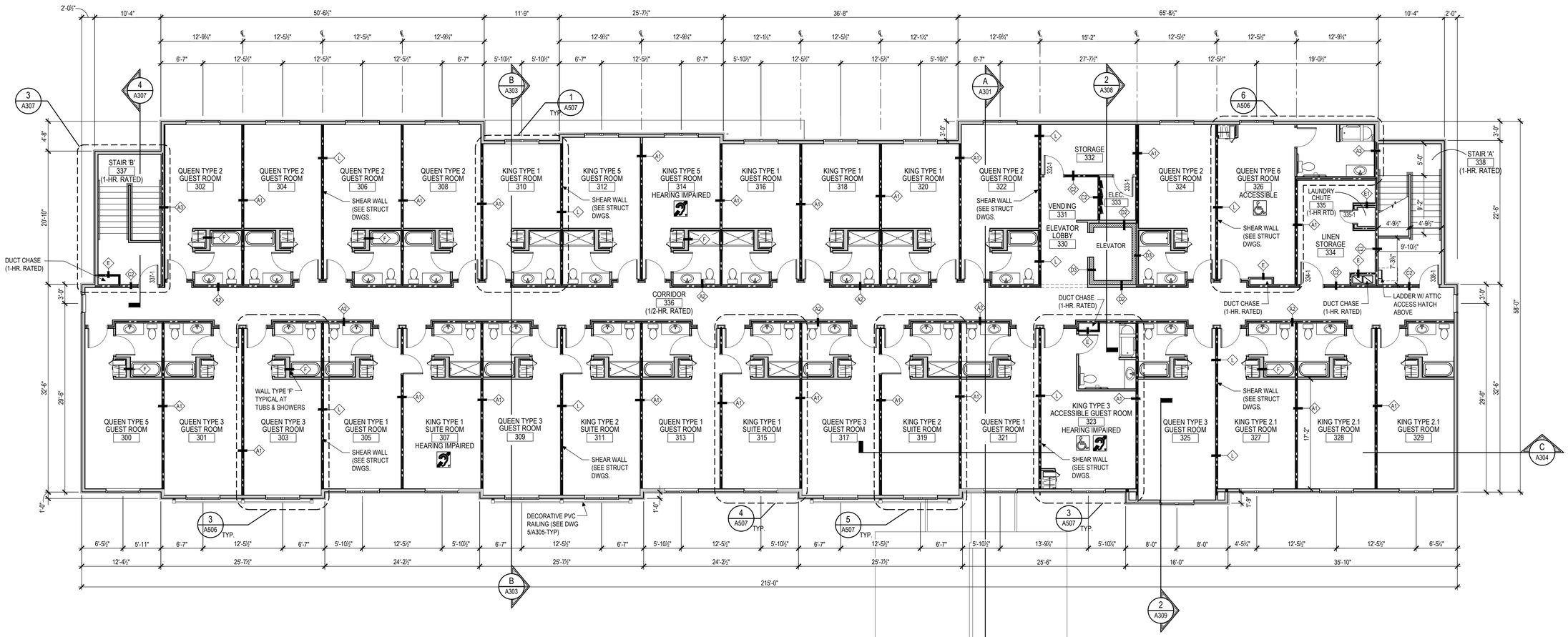

1 A103 THIRD FLOOR PLAN

SCALE: 1/8"=1'-0"

NOTE : SEE EMERGENCY FIXTURES ON SHEET EM-2

ACCESSIBLE GUEST ROOMS

FLOOR	ROOM #	ROOM TYPE	DESCRIPTION
1ST FLOOR	102	QUEEN	HEARING IMPAIRED
2ND FLOOR	202	QUEEN	HEARING IMPAIRED
	204	QUEEN	HEARING IMPAIRED
	223	KING	H/C ACCESSIBLE W/ ROLL IN SHOWER
	225	KING SUITE	HEARING IMPAIRED
	226	KING SUITE	H/C ACCESSIBLE
3RD FLOOR	307	KING SUITE	HEARING IMPAIRED
	314	KING	HEARING IMPAIRED
	323	KING	H/C ACCESSIBLE & HEARING IMPAIRED
	326	QUEEN	H/C ACCESSIBLE

GUEST ROOMS MIX

FLOOR	QUEEN	KING	KING SUITE	KING JACUZZI
1ST FLOOR	4	3	0	3
2ND FLOOR	14	12	4	0
3RD FLOOR	16	10	4	0
TOTALS:	34	25	8	3

70 ROOMS TOTAL

NOTE: SEE ACCESSIBLE GUEST ROOM CHART FOR LOCATIONS

FINAL DRAWINGS

HEX 9 ARCHITECTS
5407 Woodside Drive
Osp, PA 17027
(717) 442-9094
(717) 283-0097 fx
An LLC Company
JOSEPH TURNOWCHYK, AIA, NCARB

STATE OF NEW YORK REGISTRATION # 036357-1

ALL CONTRACTORS ARE TO VERIFY ALL DIMENSIONS, FIELD CONDITIONS AND THE WORK OF OTHER TRADES BEFORE PROCEEDING WITH THEIR WORK.

This drawing is the exclusive property of HEX 9 ARCHITECTS and may not be reproduced in any form without written authorization from HEX 9 ARCHITECTS. Unauthorized reproduction or use of any or all parts of this drawing will constitute a violation of U.S. copyright laws.

COPYRIGHT © 2018 HEX 9 ARCHITECTS ALL RIGHTS RESERVED

REVISIONS

NUMBER	DATE	REVISED BY

DATE FEBRUARY 6, 2018
DRAWN BY CMT
PROJECT NUMBER 16114

NEW FACILITY FOR:
SLEEP INN & SUITES
635 ELMIRA ROAD
ITHACA, NEW YORK 14850
CHOICE PROPERTY I.D. # NY701

THIRD FLOOR PLAN

A103
DRAWING NUMBER

I:\2016\16114 SLEEP INN - ITHACA, NY\PRODUCTION\A103 THIRD FLOOR.DWG 09-21-18 10:01 AM PRINTED BY: USER06

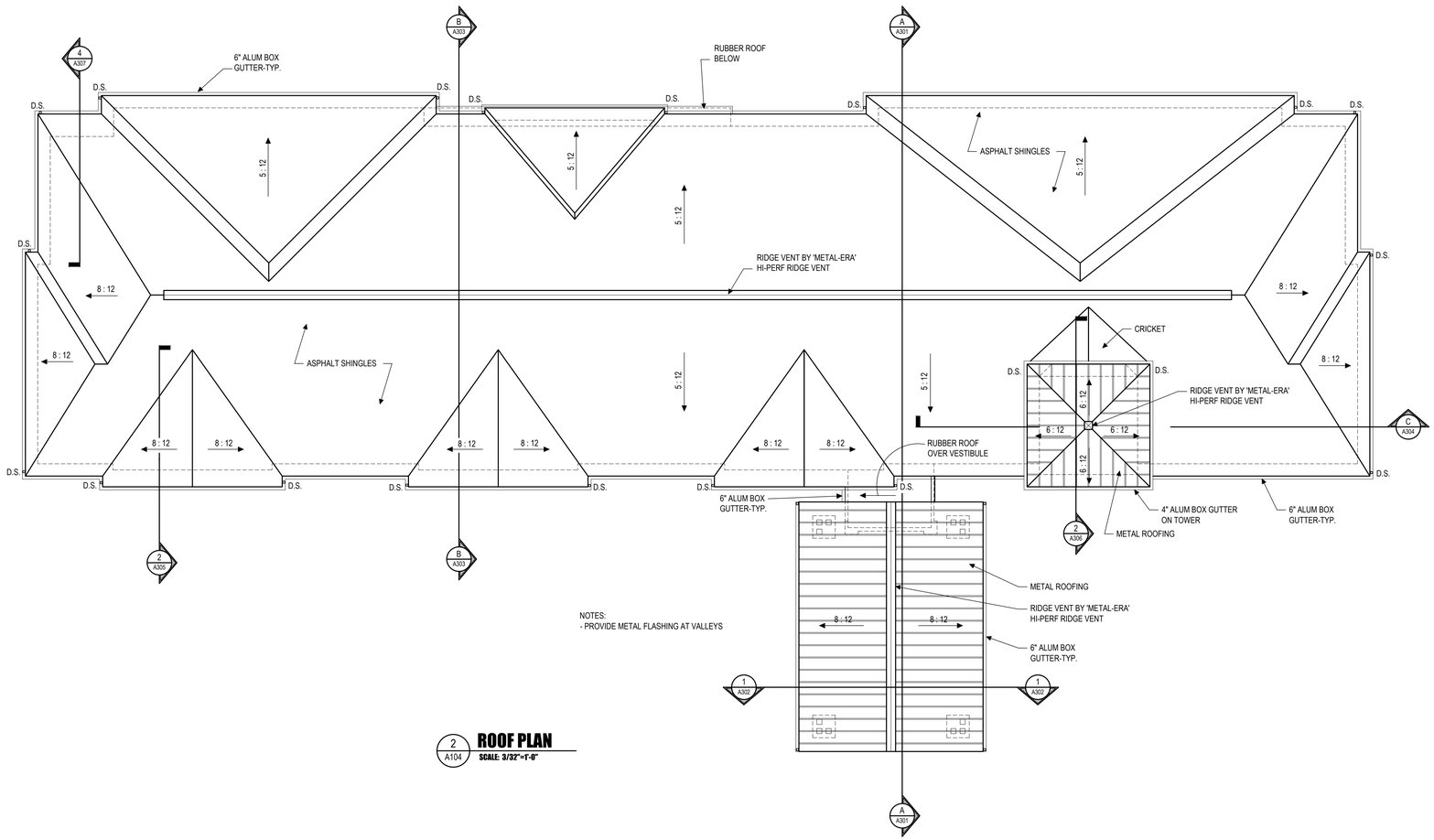

NOTES:
- PROVIDE METAL FLASHING AT VALLEYS

2 A104 **ROOF PLAN**
SCALE: 3/32"=1'-0"

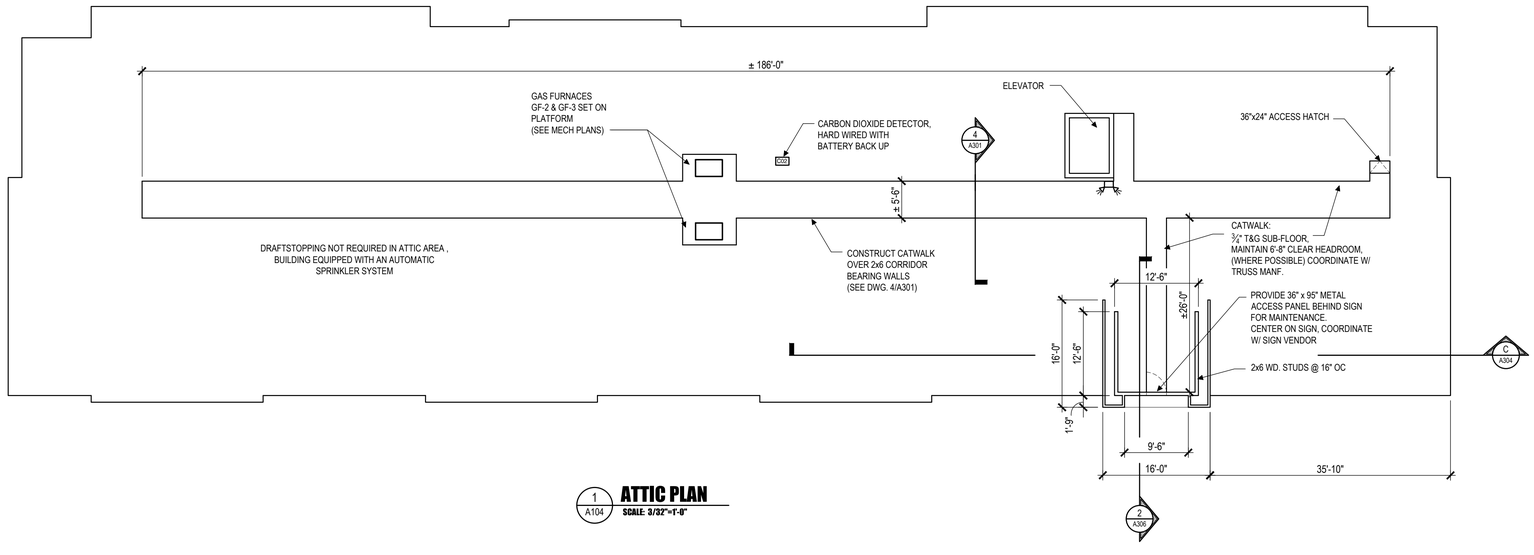

1 A104 **ATTIC PLAN**
SCALE: 3/32"=1'-0"

FINAL DRAWINGS

HEX 9 ARCHITECTS
An LLC Company
5427 Woodside Drive
Gap, PA 17527
(717) 442-9034
(717) 283-0097 fx
JOSEPH TURNOWCHYK, AIA, NCARB

STATE OF NEW YORK
REGISTRATION #
036357-1

ALL CONTRACTORS ARE TO VERIFY ALL DIMENSIONS, FIELD CONDITIONS AND THE WORK OF OTHER TRADES BEFORE PROCEEDING WITH THEIR WORK.

This drawing is the exclusive property of HEX 9 ARCHITECTS and may not be reproduced in any form without written authorization from HEX 9 ARCHITECTS. Unauthorized reproduction or use of any or all parts of this drawing will constitute a violation of U.S. copyright laws.
COPYRIGHT © 2018 HEX 9 ARCHITECTS ALL RIGHTS RESERVED

REVISIONS

NUMBER	DATE	REVISED BY

DATE	FEBRUARY 6, 2018
DRAWN BY	CMT
PROJECT NUMBER	16114

NEW FACILITY FOR:
SLEEP INN & SUITES
635 ELMIRA ROAD
ITHACA, NEW YORK 14850

CHOICE PROPERTY I.D. # NY701

ATTIC & ROOF PLAN

A104
DRAWING NUMBER

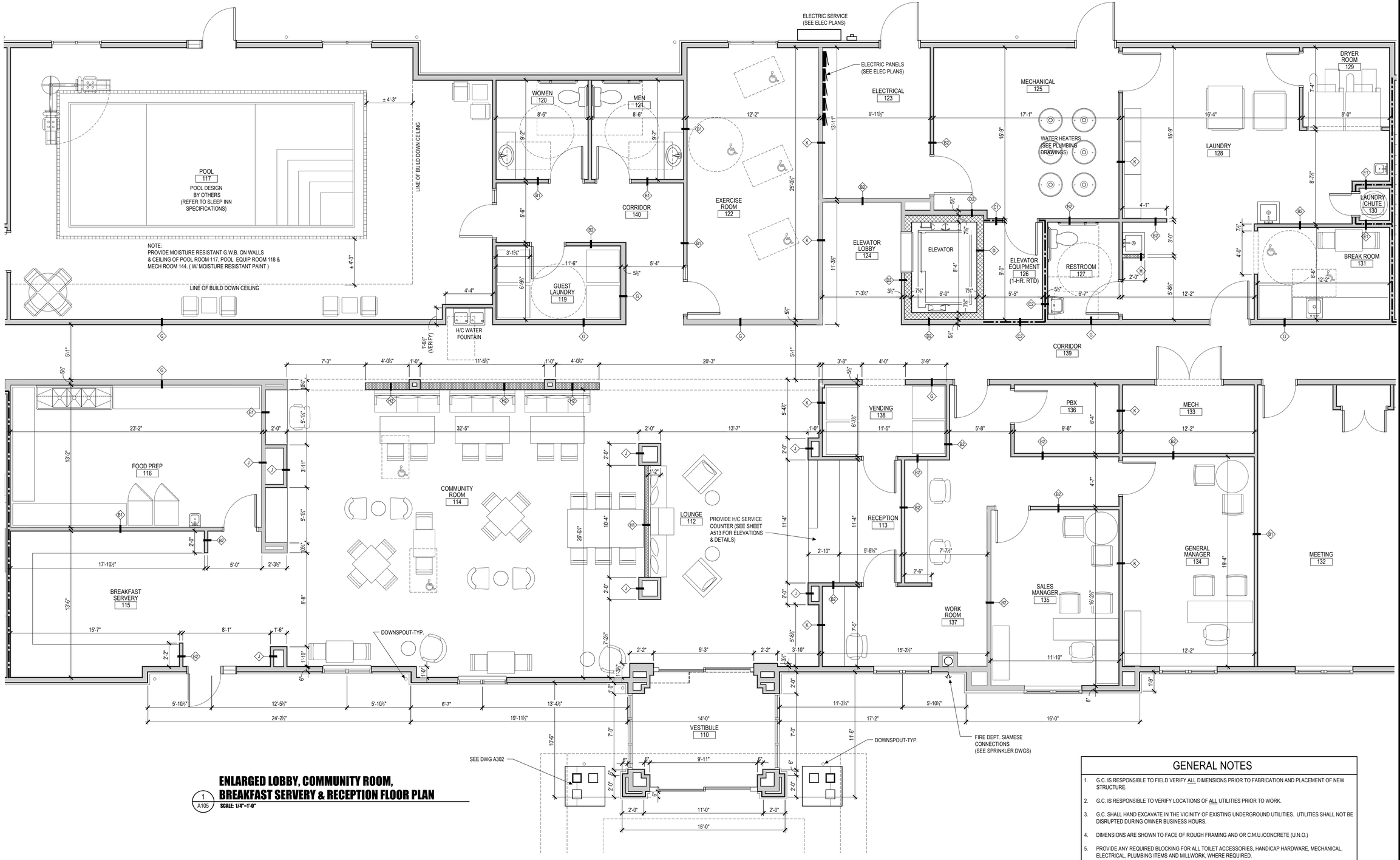

ENLARGED LOBBY, COMMUNITY ROOM, BREAKFAST SERVERY & RECEPTION FLOOR PLAN

1 / A105

SCALE: 1/4"=1'-0"

GENERAL NOTES

1. G.C. IS RESPONSIBLE TO FIELD VERIFY ALL DIMENSIONS PRIOR TO FABRICATION AND PLACEMENT OF NEW STRUCTURE.
2. G.C. IS RESPONSIBLE TO VERIFY LOCATIONS OF ALL UTILITIES PRIOR TO WORK.
3. G.C. SHALL HAND EXCAVATE IN THE VICINITY OF EXISTING UNDERGROUND UTILITIES. UTILITIES SHALL NOT BE DISRUPTED DURING OWNER BUSINESS HOURS.
4. DIMENSIONS ARE SHOWN TO FACE OF ROUGH FRAMING AND OR C.M.U./CONCRETE (U.N.O.)
5. PROVIDE ANY REQUIRED BLOCKING FOR ALL TOILET ACCESSORIES, HANDICAP HARDWARE, MECHANICAL, ELECTRICAL, PLUMBING ITEMS AND MILLWORK, WHERE REQUIRED.
6. FINISH GRADE TO SLOPE AWAY FROM BUILDING.
7. PROVIDE PRESSURE TREATED PLATES WHERE WOOD CONTACTS CONCRETE AND/OR MASONRY. (TYP.)

FINAL DRAWINGS

HEX 9 ARCHITECTS
An LLC Company
5427 Woodside Drive
Gap, PA 17527
(717) 442-9034
(717) 283-0097 fx
JOSEPH TURNOWCHYK, AIA, NCARB

STATE OF
NEW YORK
REGISTRATION #
036357-1

ALL CONTRACTORS ARE TO VERIFY ALL DIMENSIONS, FIELD CONDITIONS AND THE WORK OF OTHER TRADES BEFORE PROCEEDING WITH THEIR WORK.

This drawing is the exclusive property of HEX 9 ARCHITECTS and may not be reproduced in any form without written authorization from HEX 9 ARCHITECTS. Unauthorized reproduction or use of any or all parts of this drawing will constitute a violation of U.S. copyright laws.
COPYRIGHT © 2018 HEX 9 ARCHITECTS ALL RIGHTS RESERVED

REVISIONS

NUMBER	DATE	REVISED BY

DATE FEBRUARY 6, 2018
DRAWN BY CMT
PROJECT NUMBER 16114

NEW FACILITY FOR:
SLEEP INN & SUITES
CHOICE PROPERTY I.D. # NY701
635 ELMIRA ROAD
ITHACA, NEW YORK 14850

ENLARGED COMMON AREA FLOOR PLAN

A105
DRAWING NUMBER

D:\16114 SLEEP INN - ITHACA, NY\PRODUCTION\A105 LOBBY FLOOR PLAN.DWG 5-31-18 9:57 AM PRINTED BY: USER

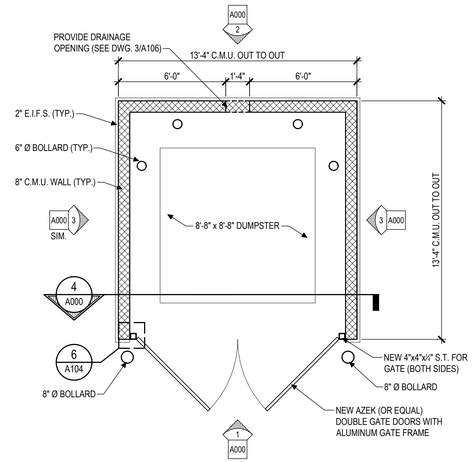

A DUMPSTER ENCLOSURE PLAN
A106 — SCALE: 1/4"=1'-0"

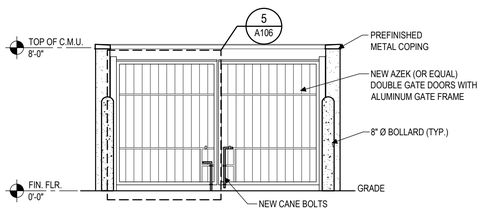

1 ENCLOSURE FRONT ELEVATION
1 / A106 — SCALE: 1/4"=1'-0"

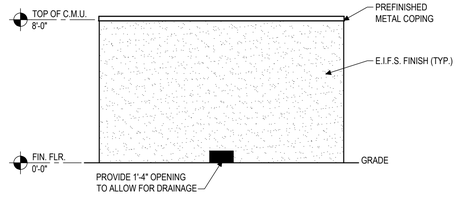

2 ENCLOSURE REAR ELEVATION
2 / A106 — SCALE: 1/4"=1'-0"

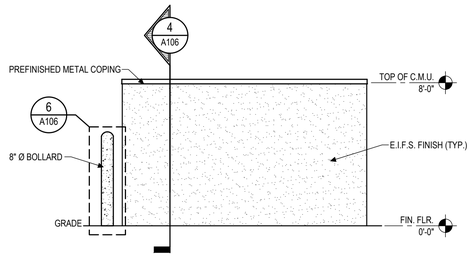

3 ENCLOSURE SIDE ELEVATION
3 / A106 — SCALE: 1/4"=1'-0"

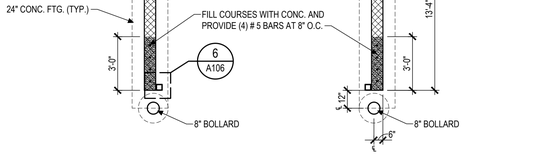

B ENCLOSURE FOUNDATION PLAN
B / A106 — SCALE: 1/4"=1'-0"

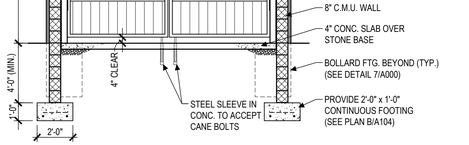

4 ENCLOSURE CROSS SECTION
4 / A106 — SCALE: 1/4"=1'-0"

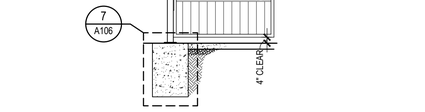

5 GATE/ BOLLARD DETAIL
5 / A106 — SCALE: 1/4"=1'-0"

GENERAL NOTES

1. G.C. IS RESPONSIBLE TO FIELD VERIFY ALL DIMENSIONS PRIOR TO FABRICATION AND PLACEMENT OF NEW STRUCTURE.
2. G.C. IS RESPONSIBLE TO VERIFY LOCATIONS OF ALL UTILITIES PRIOR TO WORK.
3. DIMENSIONS ARE SHOWN TO FACE OF ROUGH FRAMING AND OR C.M.U./CONCRETE (U.N.O.)
4. FINISH GRADE TO SLOPE AWAY FROM NEW STRUCTURE.
5. PROVIDE PRESSURE TREATED PLATES WHERE WOOD CONTACTS CONCRETE AND/OR MASONRY. (TYP.)

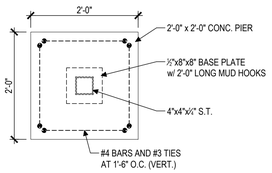

6 BOLLARD PIER DETAIL (PLAN VIEW)
6 / A106 — SCALE: 3/4"=1'-0"

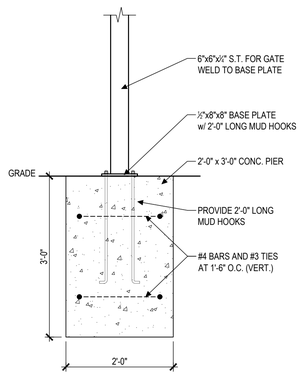

7 PIPE BOLLARD DETAIL
7 / A106 — SCALE: 3/4"=1'-0"

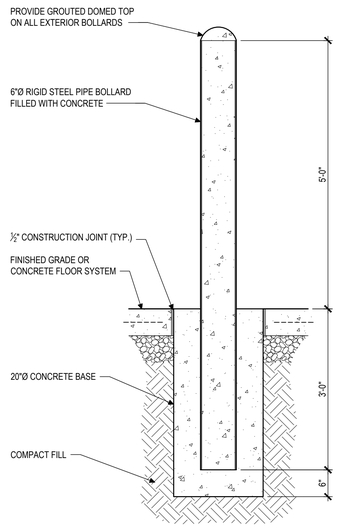

8 PIPE BOLLARD DETAIL
8 / A106 — SCALE: 3/4"=1'-0"

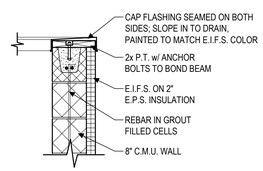

9 COPING DETAIL
9 / A104 — SCALE: 3/4"=1'-0"

HEX 9 ARCHITECTS
5427 Woodside Drive
Gap, PA 17527
(717) 442-9094
(717) 283-0097 fx
An LLC Company
JOSEPH TURNOWCHYK, AIA, NCARB

STATE OF
NEW YORK
REGISTRATION #
036357-1

ALL CONTRACTORS ARE TO VERIFY ALL DIMENSIONS, FIELD CONDITIONS AND THE WORK OF OTHER TRADES BEFORE PROCEEDING WITH THEIR WORK.

This drawing is the exclusive property of HEX 9 ARCHITECTS and may not be reproduced in any form without written authorization from HEX 9 ARCHITECTS. Unauthorized reproduction or use of any or all parts of this drawing will constitute a violation of U.S. copyright laws.
COPYRIGHT © 2018 HEX 9 ARCHITECTS ALL RIGHTS RESERVED

REVISIONS

NUMBER	DATE	REVISED BY

DATE	FEBRUARY 6, 2018
DRAWN BY	BFL
PROJECT NUMBER	16114

NEW FACILITY FOR:
SLEEP INN & SUITES CHOICE PROPERTY I.D. # NY701
635 ELMIRA ROAD
ITHACA, NEW YORK 14850

DUMPSTER ENCLOSURE PLANS, SECTIONS, AND ELEVATIONS

A106
DRAWING NUMBER

FINAL DRAWINGS

D:\16114 SLEEP INN - ITHACA, NY\PRODUCTION\A106\DUMPSTER ENCLOSURE.DWG (5-31-18 9:57 AM PRINTED BY: GEBOK

A A201 **FRONT / NORTH ELEVATION**
SCALE: 1/8"=1'-0"

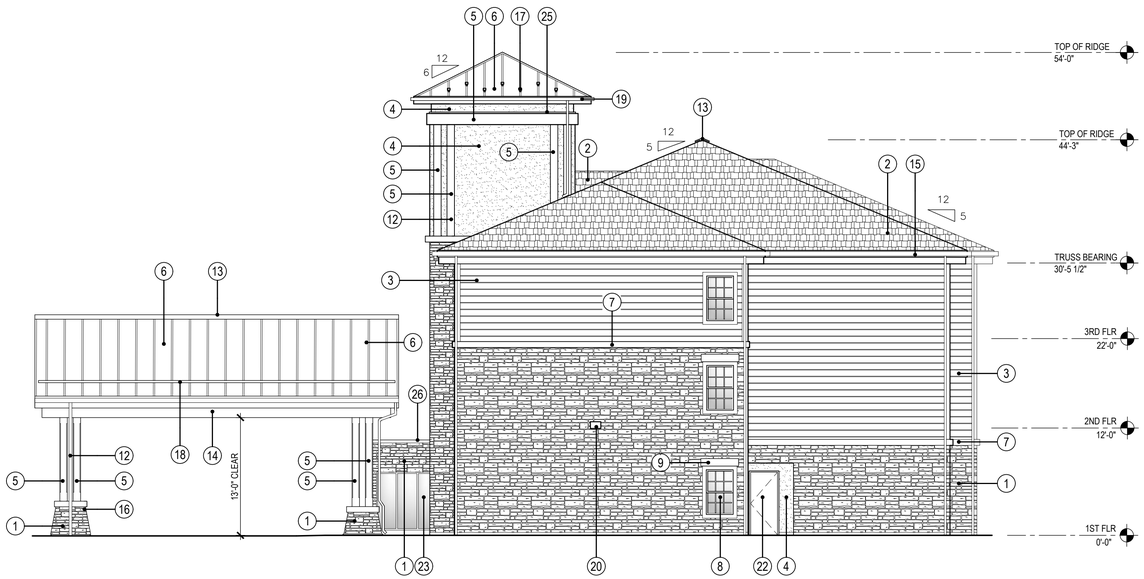

B A201 **RIGHT SIDE / WEST ELEVATION**
SCALE: 1/8"=1'-0"

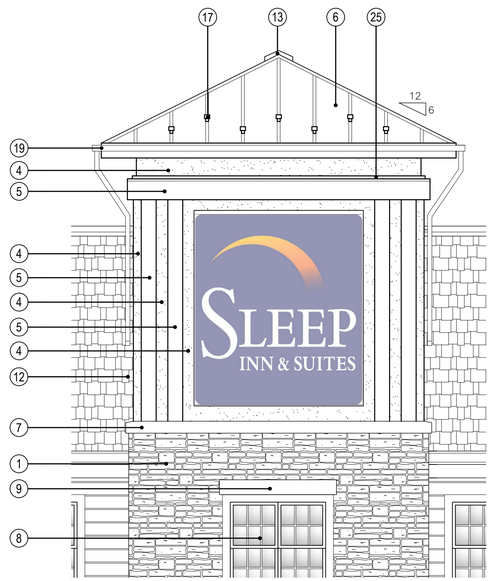

1 A201 **ENLARGED TOWER ELEVATION**
SCALE: 1/4"=1'-0"

ELEVATIONS KEY NOTES

1	ELDERADO STONE - MOUNTAIN LEDGE PANELS (WHISKEY CREEK)
2	CERTAINTEED ASPHALT SHINGLES - XT 25 METRIC (WEATHERED WOOD)
3	HARDIEPLANK LAP SIDING (NAVAJO BEIGE)
4	DRYVIT (FRENCH VANILLA 423A)
5	STAINED HEAVY TIMBER (SHERWIN WILLIAMS 3522 BANYAN BROWN)
5A	DECORATIVE HEAVY TIMBER TRUSS (SEE DETAILS) (SHERWIN WILLIAMS 3522 BANYAN BROWN)
6	FABRAL STANDING SEAM METAL ROOFING (DARK BRONZE)
7	STONE SILL - ELDERADO STONE, PEWTER SNAPPED EDGE
8	FIXED DOUBLE HUNG WINDOW W/ ALUM WRAPPED DBL. 2x4 SURROUND
9	DECORATIVE STONE HEADER OVER WINDOW (10" HIGH) COLOR T.B.D.
10	PTAC GRILLE
11	DECORATIVE RAILING SYSTEM (SEE DWGS 1,4,5/A305) COLOR TO MATCH HEAVY TIMBER STAIN COLOR
12	DOWNSPOUT
13	RIDGE VENT BY 'METAL-ERA' HI-PERF RIDGE VENT
14	HEAVY TIMBER TRIM OVER FRAMED BOX BEAM
15	6" ALUM BOX GUTTER OVER ALUM WRAPPED 2x FASCIA COLOR TO MATCH SIDING (NAVAJO BEIGE OR SIMILAR)
16	PRE-CAST STONE CAP
17	SNOW GUARDS ON METAL ROOF
18	SNOW GUARD RAIL ON METAL ROOF
19	4" ALUM BOX GUTTER OVER 2x10 ALUM WRAPPED FASCIA COLOR TO MATCH SIDING (NAVAJO BEIGE OR SIMILAR)
20	WALL PACK LIGHT FIXTURE (SEE LIGHTING PLAN)
21	AUTOMATIC SLIDING ENTRY DOOR
22	PAINTED METAL INSULATED DOOR
23	ALUM STOREFRONT WINDOW
24	ALUM STOREFRONT DOOR W/ SIDELIGHT
25	EXTERIOR L.E.D. STRIP FIXTURE SECURED TO METAL ANGLE (3) SIDES OF TOWER (SEE DWG 3/A309)
26	2- PIECE WALL CAP FLASHING

FINAL DRAWINGS

HEX 9 ARCHITECTS
An LLC Company
5427 Woodside Drive
Gap, PA 17527
(717) 442-9034
(717) 283-0097 fx
JOSEPH TURNOWCHYK, AIA, NCARB

STATE OF NEW YORK REGISTRATION # 036357-1

ALL CONTRACTORS ARE TO VERIFY ALL DIMENSIONS, FIELD CONDITIONS AND THE WORK OF OTHER TRADES BEFORE PROCEEDING WITH THEIR WORK.

This drawing is the exclusive property of HEX 9 ARCHITECTS and may not be reproduced in any form without written authorization from HEX 9 ARCHITECTS. Unauthorized reproduction or use of any or all parts of this drawing will constitute a violation of U.S. copyright laws.
COPYRIGHT © 2018 HEX 9 ARCHITECTS ALL RIGHTS RESERVED

REVISIONS

NUMBER	DATE	REVISED BY

DATE	FEBRUARY 6, 2018
DRAWN BY	CMT
PROJECT NUMBER	16114

NEW FACILITY FOR:
SLEEP INN & SUITES
635 ELMIRA ROAD
ITHACA, NEW YORK 14850

CHOICE PROPERTY I.D. # NY701

EXTERIOR ELEVATIONS

A201
DRAWING NUMBER

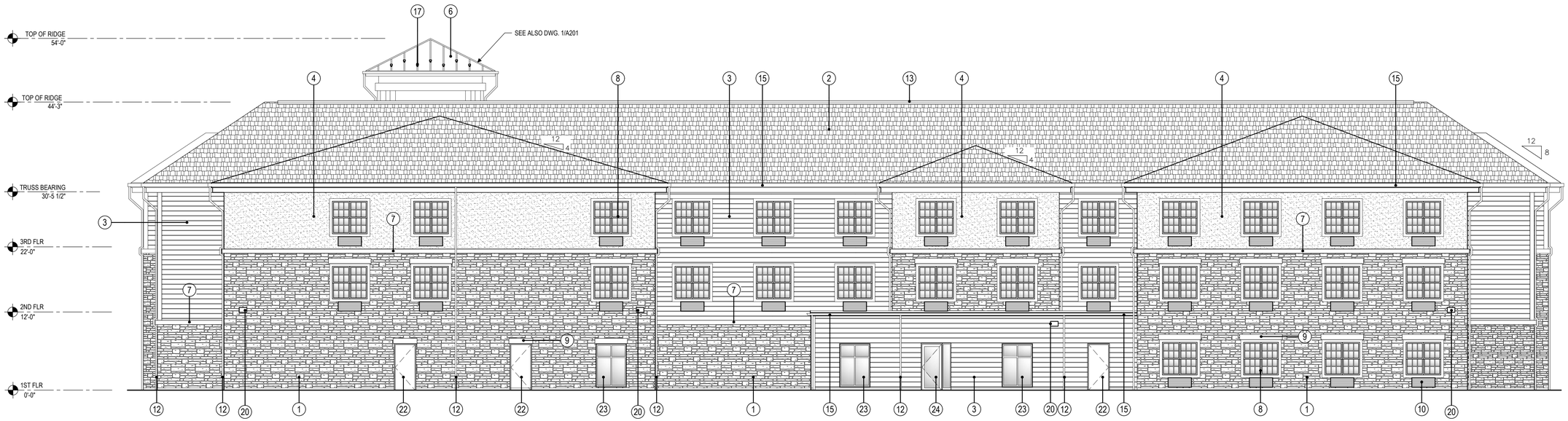

C
A202
REAR / SOUTH ELEVATION
SCALE: 1/8"=1'-0"

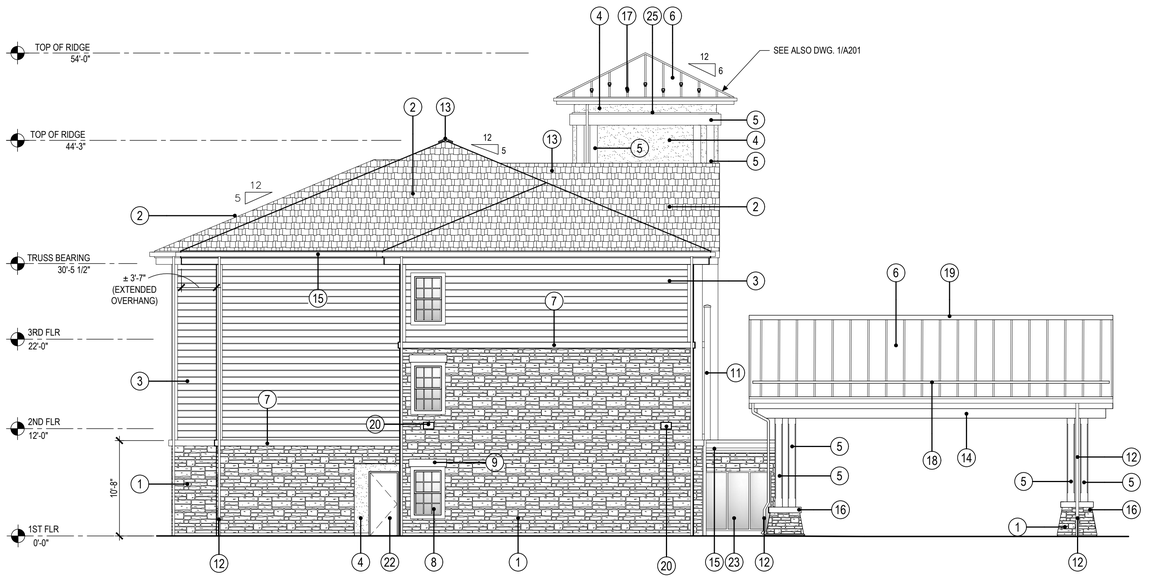

D
A202
LEFT SIDE / EAST ELEVATION
SCALE: 1/8"=1'-0"

ELEVATIONS KEY NOTES

1	ELDERADO STONE - MOUNTAIN LEDGE PANELS (WHISKEY CREEK)
2	CERTAINTEED ASPHALT SHINGLES - XT 25 METRIC (WEATHERED WOOD)
3	HARDIEPLANK LAP SIDING (NAVAJO BEIGE)
4	DRYVIT (FRENCH VANILLA 423A)
5	STAINED HEAVY TIMBER (SHERWIN WILLIAMS 3522 BANYAN BROWN)
5A	DECORATIVE HEAVY TIMBER TRUSS (SEE DETAILS) (SHERWIN WILLIAMS 3522 BANYAN BROWN)
6	FABRAL STANDING SEAM METAL ROOFING (DARK BRONZE)
7	STONE SILL - ELDERADO STONE, PEWTER SNAPPED EDGE
8	FIXED DOUBLE HUNG WINDOW W/ ALUM WRAPPED DBL. 2x4 SURROUND
9	DECORATIVE STONE HEADER OVER WINDOW (10" HIGH) COLOR T.B.D.
10	PTAC GRILLE
11	DECORATIVE RAILING SYSTEM (SEE DWGS 1,4,5/A305) COLOR TO MATCH HEAVY TIMBER STAIN COLOR
12	DOWNSPOUT
13	RIDGE VENT BY 'METAL-ERA' HI-PERF RIDGE VENT
14	HEAVY TIMBER TRIM OVER FRAMED BOX BEAM
15	6" ALUM BOX GUTTER OVER ALUM WRAPPED 2x FASCIA COLOR TO MATCH SIDING (NAVAJO BEIGE OR SIMILAR)
16	PRE-CAST STONE CAP
17	SNOW GUARDS ON METAL ROOF
18	SNOW GUARD RAIL ON METAL ROOF
19	4" ALUM BOX GUTTER OVER 2x10 ALUM WRAPPED FASCIA COLOR TO MATCH SIDING (NAVAJO BEIGE OR SIMILAR)
20	WALL PACK LIGHT FIXTURE (SEE LIGHTING PLAN)
21	AUTOMATIC SLIDING ENTRY DOOR
22	PAINTED METAL INSULATED DOOR
23	ALUM STOREFRONT WINDOW
24	ALUM STOREFRONT DOOR W/ SIDELIGHT
25	EXTERIOR L.E.D. STRIP FIXTURE SECURED TO METAL ANGLE (3) SIDES OF TOWER (SEE DWG 3/A309)
26	2- PIECE WALL CAP FLASHING

FINAL DRAWINGS

HEX 9 ARCHITECTS
An LLC Company
5427 Woodside Drive
Gap, PA 17527
(717) 442-9034
(717) 283-0097 fx
JOSEPH TURNOWCHYK, AIA, NCARB

STATE OF
NEW YORK
REGISTRATION #
036357-1

ALL CONTRACTORS ARE TO VERIFY ALL DIMENSIONS, FIELD CONDITIONS AND THE WORK OF OTHER TRADES BEFORE PROCEEDING WITH THEIR WORK.

This drawing is the exclusive property of HEX 9 ARCHITECTS and may not be reproduced in any form without written authorization from HEX 9 ARCHITECTS. Unauthorized reproduction or use of any or all parts of this drawing will constitute a violation of U.S. copyright laws.

COPYRIGHT © 2018 HEX 9 ARCHITECTS ALL RIGHTS RESERVED

REVISIONS

NUMBER	DATE	REVISED BY

DATE	FEBRUARY 6, 2018
DRAWN BY	CMT
PROJECT NUMBER	16114

NEW FACILITY FOR:
SLEEP INN & SUITES
635 ELMIRA ROAD
ITHACA, NEW YORK 14850

CHOICE PROPERTY I.D. # NY701

EXTERIOR ELEVATIONS

A202
DRAWING NUMBER

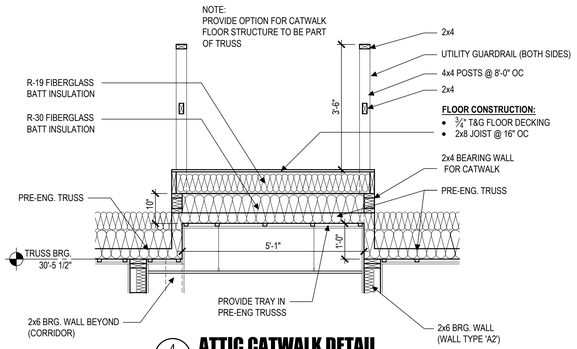

4 A301 **ATTIC CATWALK DETAIL**
SCALE: 1/2"=1'-0"

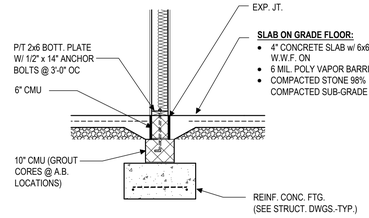

3 A301 **CORRIDOR WALL FOOTING DETAIL**
SCALE: 1/2"=1'-0"

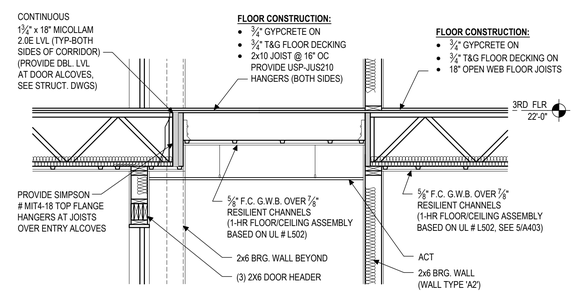

2 A301 **DETAIL**
SCALE: 1/2"=1'-0"

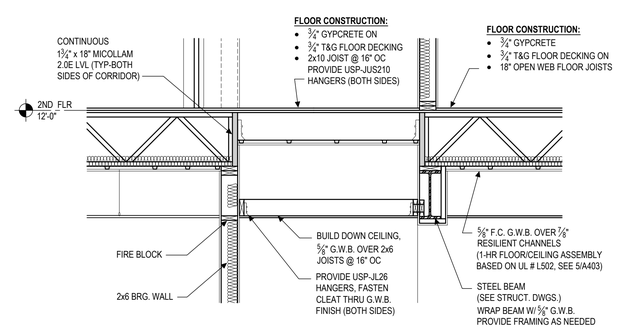

1 A301 **DETAIL**
SCALE: 1/2"=1'-0"

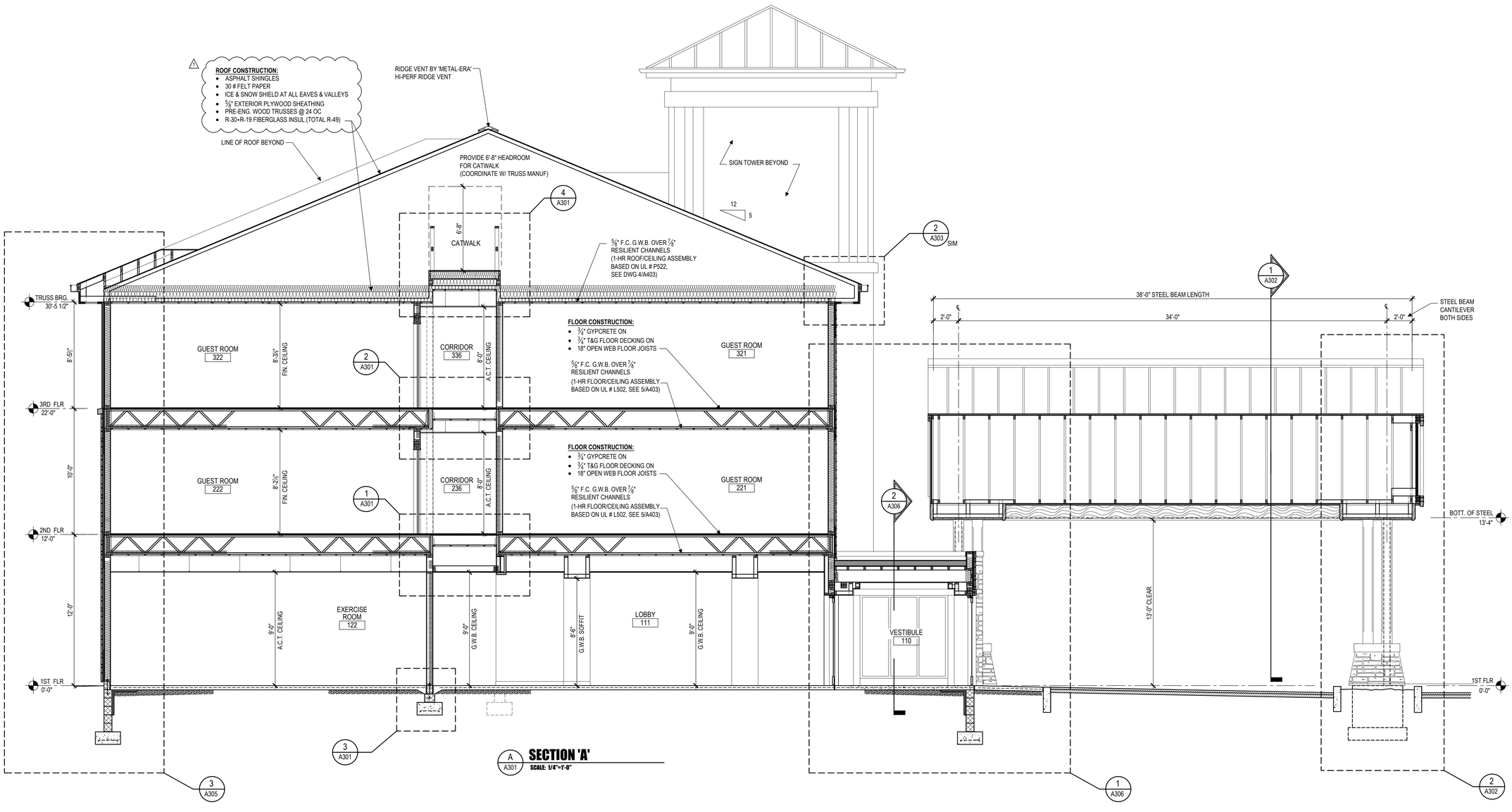

A A301 **SECTION 'A'**
SCALE: 1/4"=1'-0"

FINAL DRAWINGS

HEX 9 ARCHITECTS
5427 Woodside Drive
Gap, PA 17527
(717) 442-9034
(717) 283-0097 fx
An LLC Company
JOSEPH TURNOWCHYK, AIA, NCARB

STATE OF
NEW YORK
REGISTRATION #
036357-1

ALL CONTRACTORS ARE TO VERIFY ALL DIMENSIONS, FIELD CONDITIONS AND THE WORK OF OTHER TRADES BEFORE PROCEEDING WITH THEIR WORK.

This drawing is the exclusive property of HEX 9 ARCHITECTS and may not be reproduced in any form without written authorization from HEX 9 ARCHITECTS. Unauthorized reproduction or use of any or all parts of this drawing will constitute a violation of U.S. copyright laws.
COPYRIGHT © 2018 HEX 9 ARCHITECTS ALL RIGHTS RESERVED

REVISIONS

NUMBER	DATE	REVISED BY
1	6-01-2018	RN

DATE FEBRUARY 6, 2018
DRAWN BY RN
PROJECT NUMBER 16114

NEW FACILITY FOR:
SLEEP INN & SUITES CHOICE PROPERTY I.D. # NY701
635 ELMIRA ROAD
ITHACA, NEW YORK 14850

BUILDING SECTION & DETAILS

A301
DRAWING NUMBER

2018-6-14 SLEEP INN - ITHACA, NY\PRODUCTION\A301 SECTIONS.DWG 6-13-18 9:49 AM PRINTED BY: USER

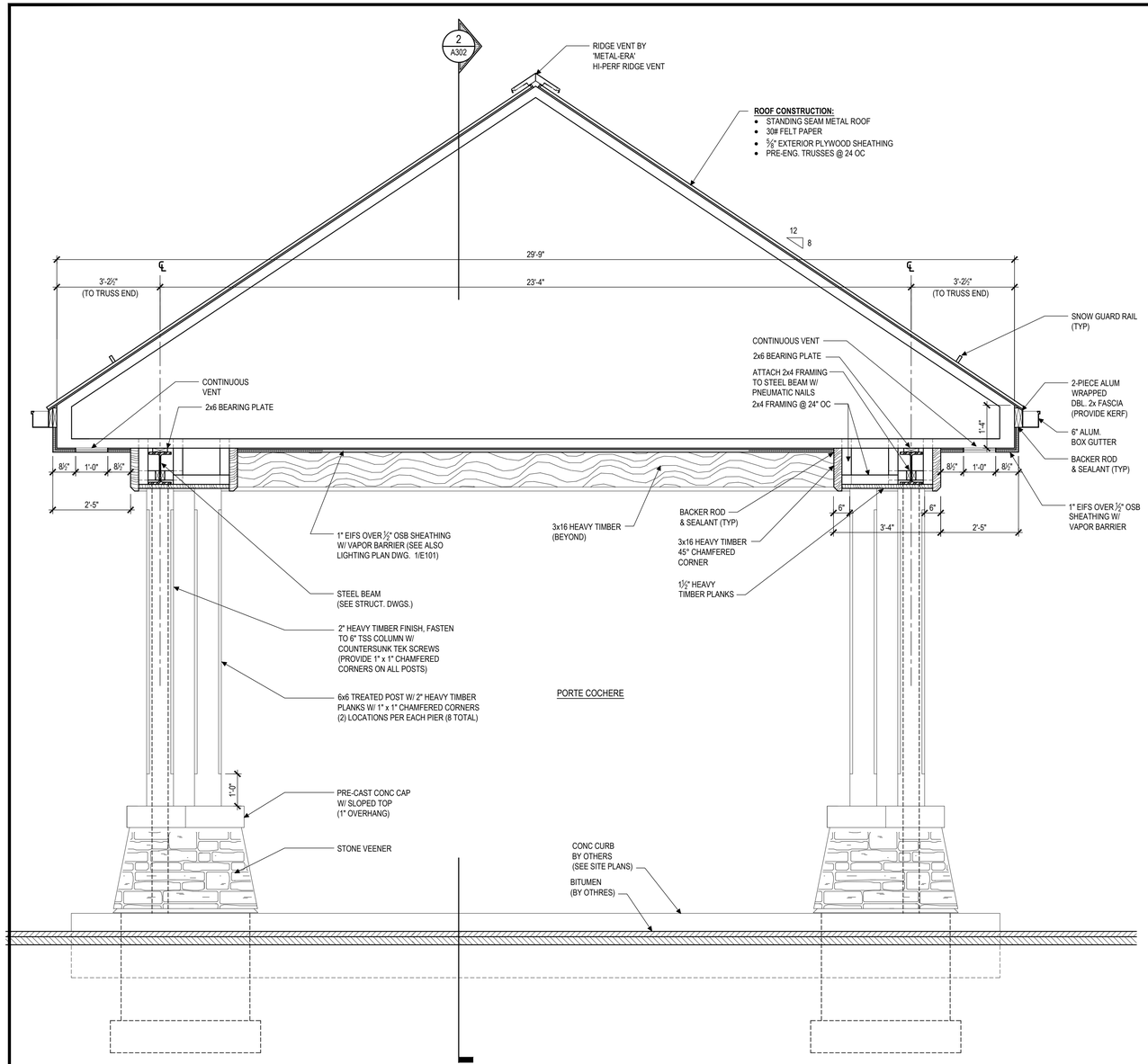

1 A302 **PORTE COCHERE SECTION**
SCALE: 1/2"=1'-0"

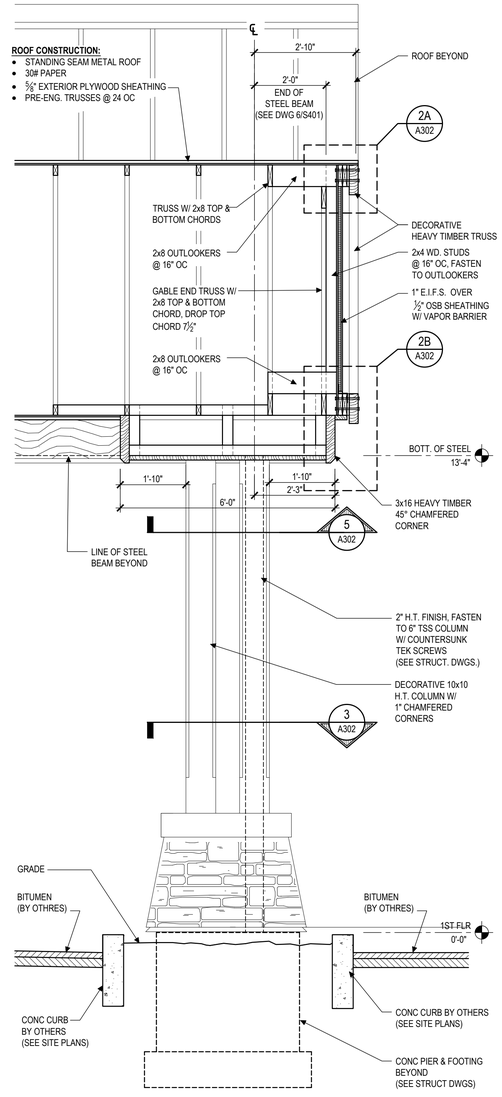

2 A302 **DETAIL**
SCALE: 1/2"=1'-0"

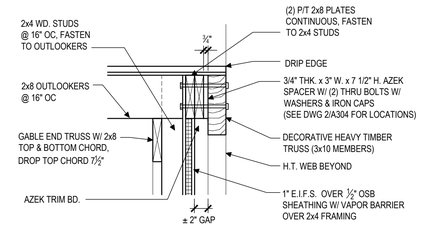

2A A302 **DETAIL**
SCALE: 1"=1'-0"

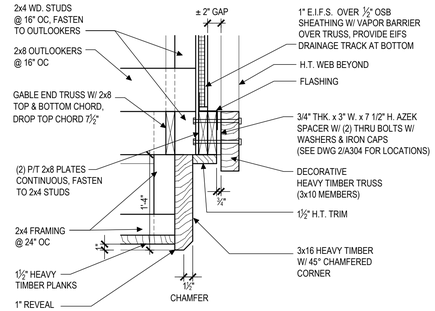

2B A302 **DETAIL**
SCALE: 1"=1'-0"

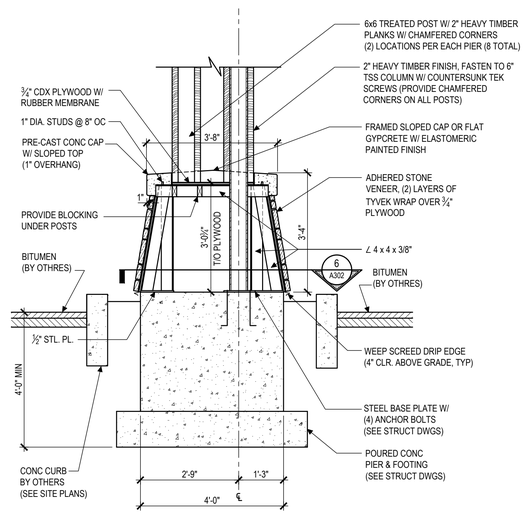

4 A302 **CANOPY PIER & BASE SECTION**
SCALE: 1/2"=1'-0"

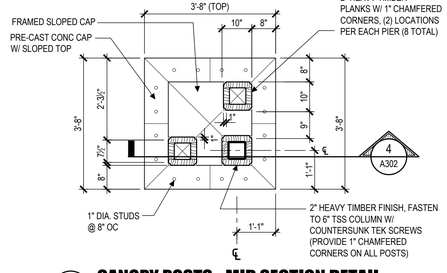

3 A302 **CANOPY POSTS - MID SECTION DETAIL**
SCALE: 1/2"=1'-0"

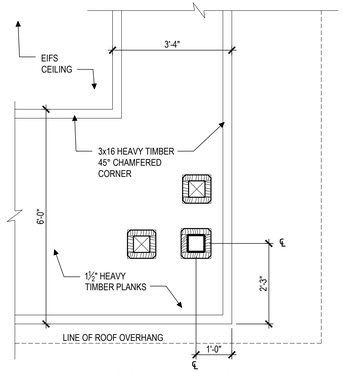

5 A302 **CANOPY POSTS - TOP DETAIL**
SCALE: 1/2"=1'-0"

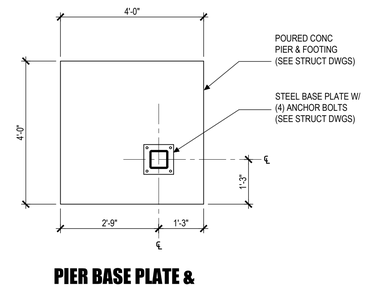

6 A302 **PIER BASE PLATE &
STEEL FRAMING DETAIL**
SCALE: 1/2"=1'-0"

HEX 9 ARCHITECTS
5427 Woodside Drive
Osp, PA 17027
(717) 442-9034
(717) 283-0097 fx
An LLC Company
JOSEPH TURNOWCHYK, AIA, NCARB

STATE OF
NEW YORK
REGISTRATION #
036357-1

ALL CONTRACTORS ARE TO VERIFY ALL DIMENSIONS, FIELD CONDITIONS AND THE WORK OF OTHER TRADES BEFORE PROCEEDING WITH THEIR WORK.

This drawing is the exclusive property of HEX 9 ARCHITECTS and may not be reproduced in any form without written authorization from HEX 9 ARCHITECTS. Unauthorized reproduction or use of any or all parts of this drawing will constitute a violation of U.S. copyright laws.

COPYRIGHT © 2018 HEX 9 ARCHITECTS ALL RIGHTS RESERVED

REVISIONS

NUMBER	DATE	REVISED BY

DATE FEBRUARY 6, 2018
DRAWN BY RN
PROJECT NUMBER 16114

NEW FACILITY FOR:
SLEEP INN & SUITES
635 ELMIRA ROAD
ITHACA, NEW YORK 14850
CHOICE PROPERTY I.D. # NY701

PORTE COCHERE SECTION & DETAILS

A302
DRAWING NUMBER

FINAL DRAWINGS

2018-02-14 SLEEP INN - ITHACA, NY\PRODUCTION\A302 SECTIONS.DWG 6/13/18 9:55 AM PRINTED BY: GEROK

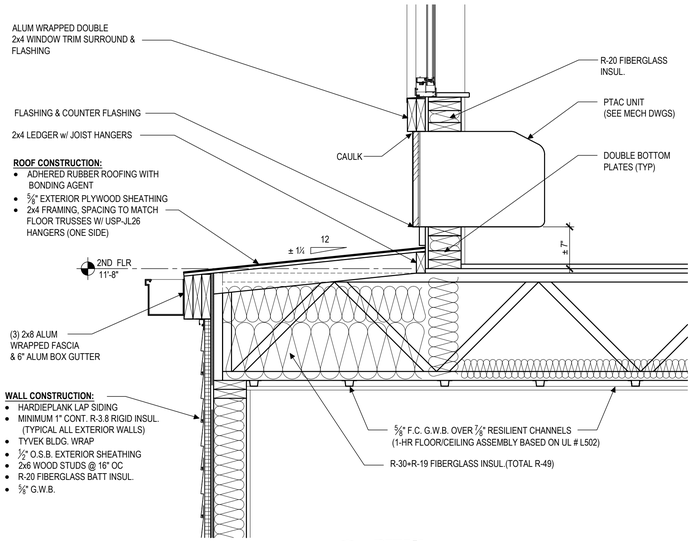

3 A303 **DETAIL**
SCALE: 1"=1'-0"

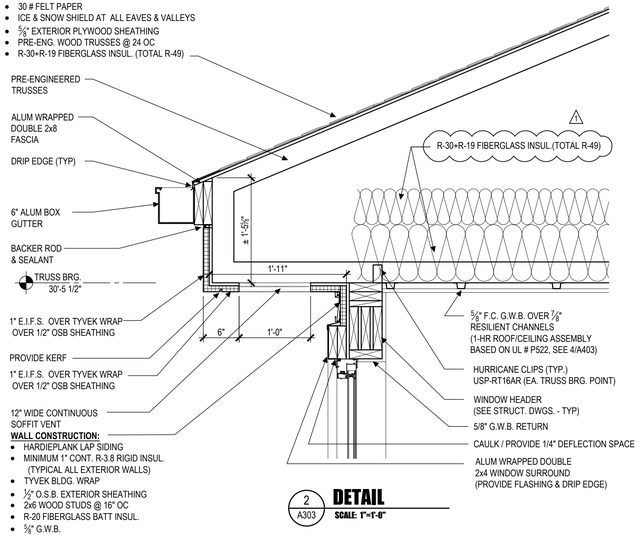

2 A303 **DETAIL**
SCALE: 1"=1'-0"

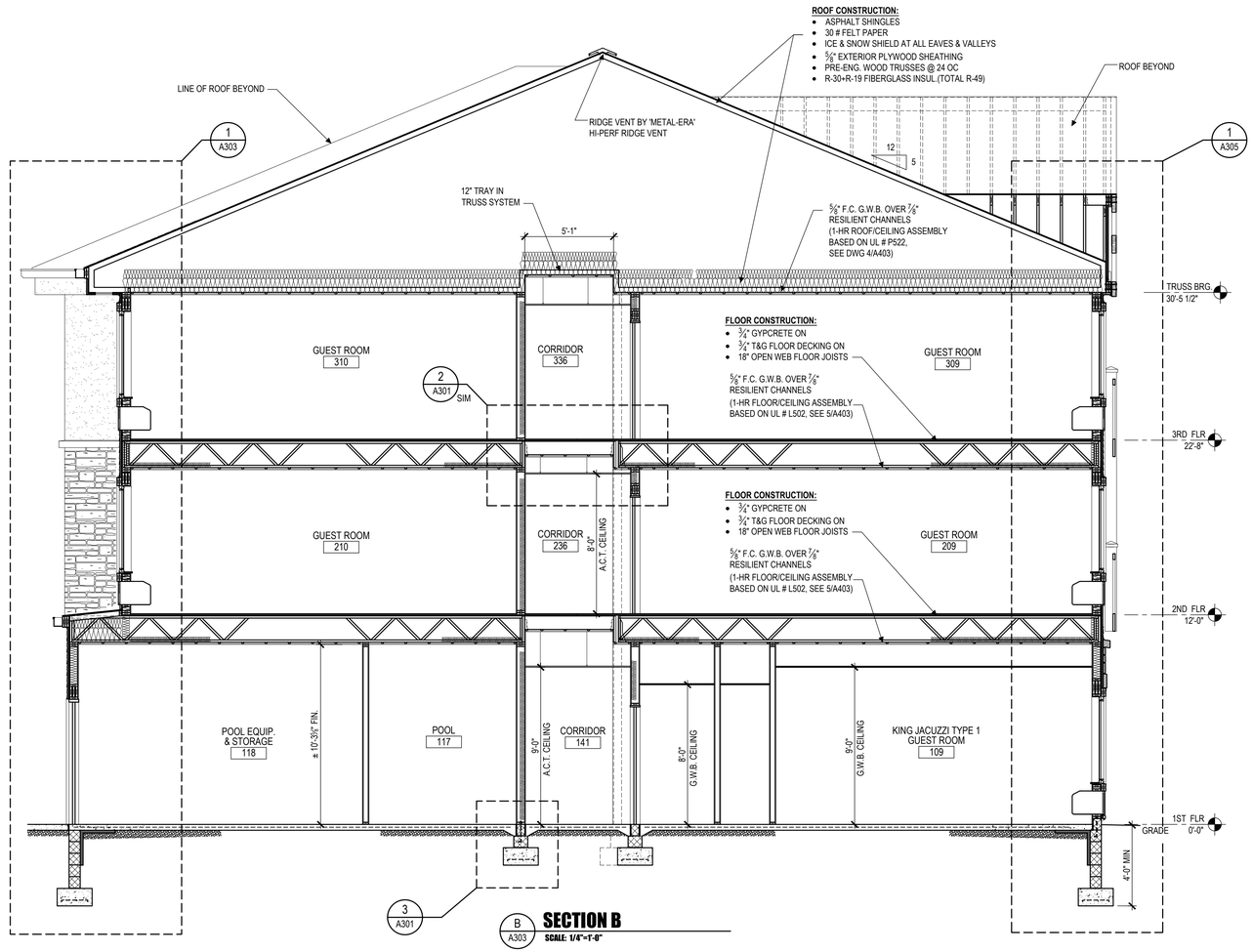

B A303 **SECTION B**
SCALE: 1/4"=1'-0"

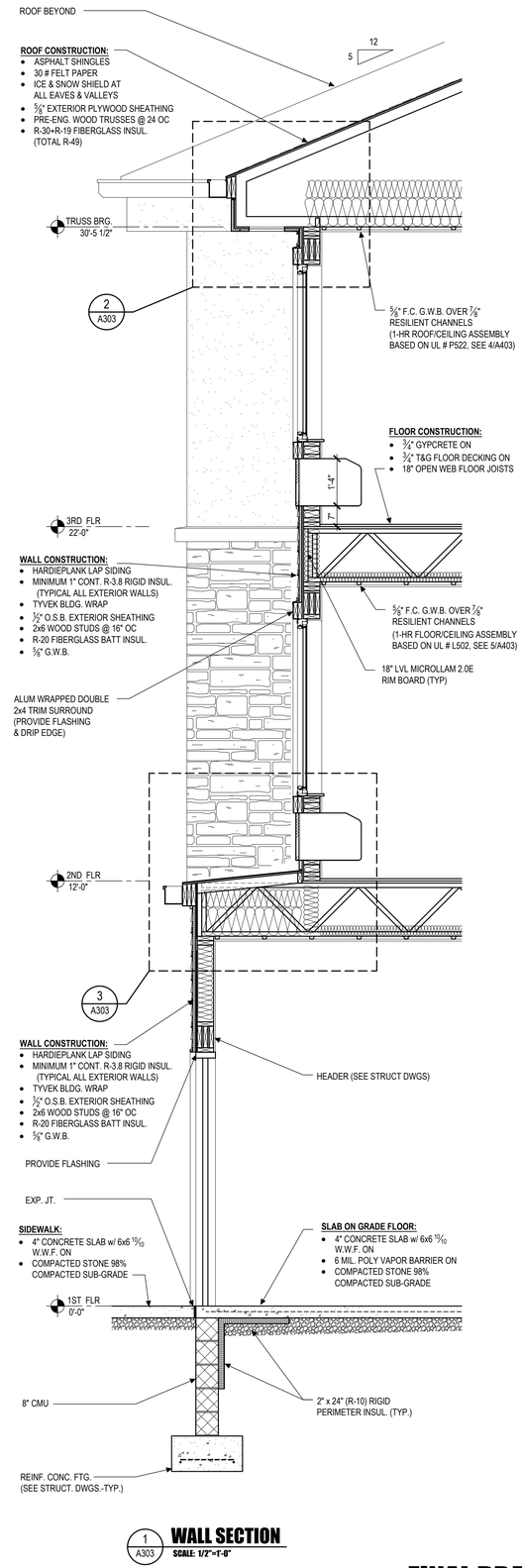

1 A303 **WALL SECTION**
SCALE: 1/2"=1'-0"

HEX 9 ARCHITECTS
5427 Woodside Drive
Osp, PA 17577
(717) 442-9094
(717) 283-0097 fx
An LLC Company
JOSEPH TURNOWCHYK, AIA, NCARB

STATE OF NEW YORK REGISTRATION # 036357-1

ALL CONTRACTORS ARE TO VERIFY ALL DIMENSIONS, FIELD CONDITIONS AND THE WORK OF OTHER TRADES BEFORE PROCEEDING WITH THEIR WORK.

This drawing is the exclusive property of HEX 9 ARCHITECTS and may not be reproduced in any form without written authorization from HEX 9 ARCHITECTS. Unauthorized reproduction or use of any or all parts of this drawing will constitute a violation of U.S. copyright laws.
COPYRIGHT © 2018 HEX 9 ARCHITECTS ALL RIGHTS RESERVED

REVISIONS

NUMBER	DATE	REVISED BY
1	6-01-2018	RN

DATE FEBRUARY 6, 2018
DRAWN BY RN
PROJECT NUMBER 16114

NEW FACILITY FOR:
SLEEP INN & SUITES CHOICE PROPERTY I.D. # NY701
635 ELMIRA ROAD
ITHACA, NEW YORK 14850

BUILDING SECTION & DETAILS

A303
DRAWING NUMBER

FINAL DRAWINGS

12/6/2018 6:57:09 PM - ITHACA, NY/PRODUCTION/ASSI SECTIONS.DWG (8.5x11 @ A3 PRINTED BY - EVERB

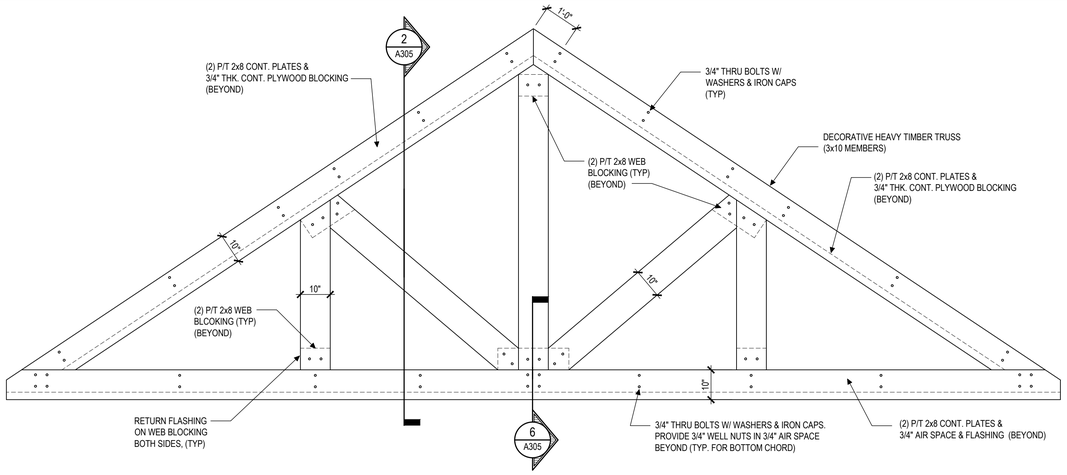

2 A304 **DECORATIVE HEAVY TIMBER TRUSS**
SCALE: 1/2"=1'-0"

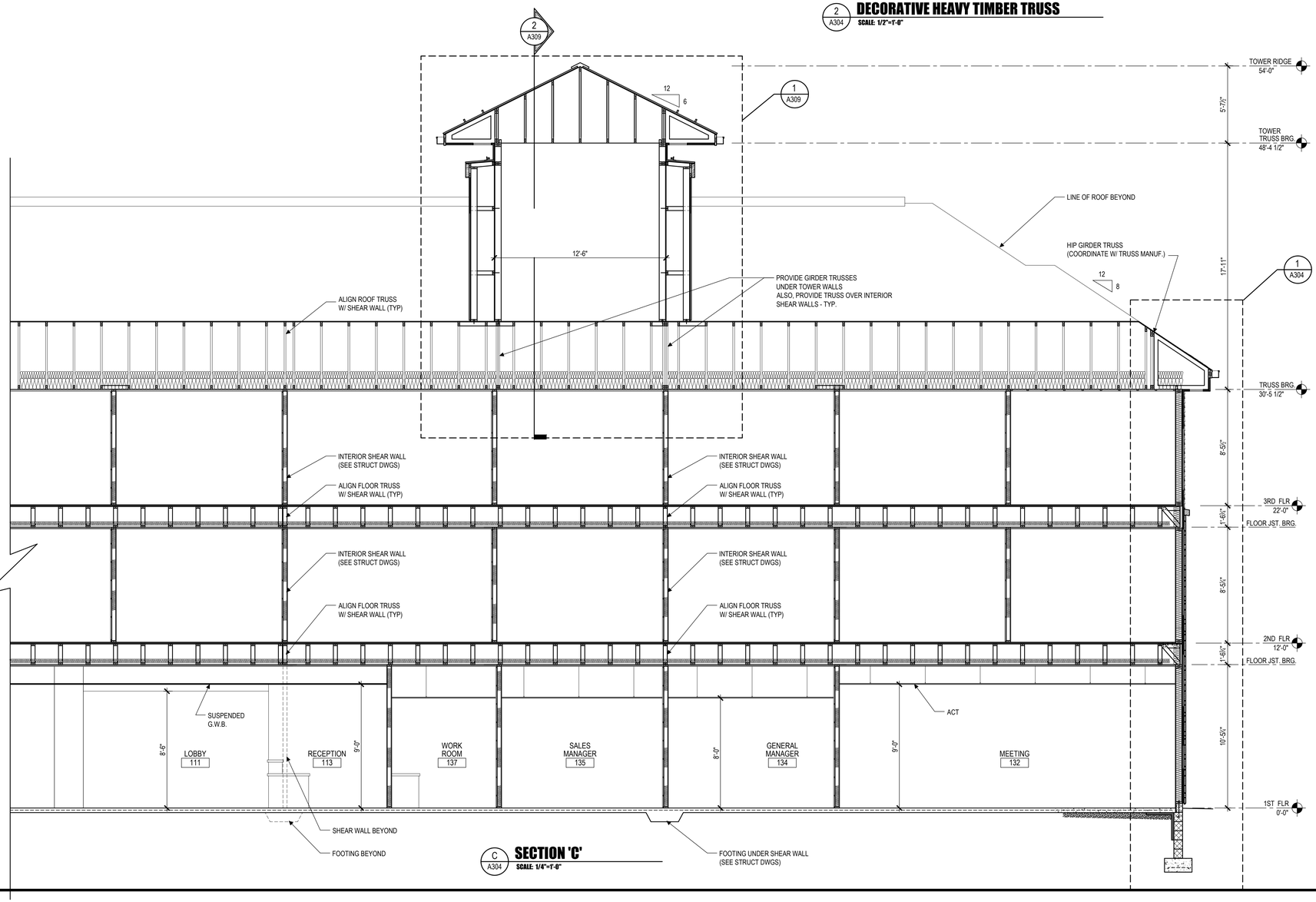

C A304 **SECTION 'C'**
SCALE: 1/4"=1'-0"

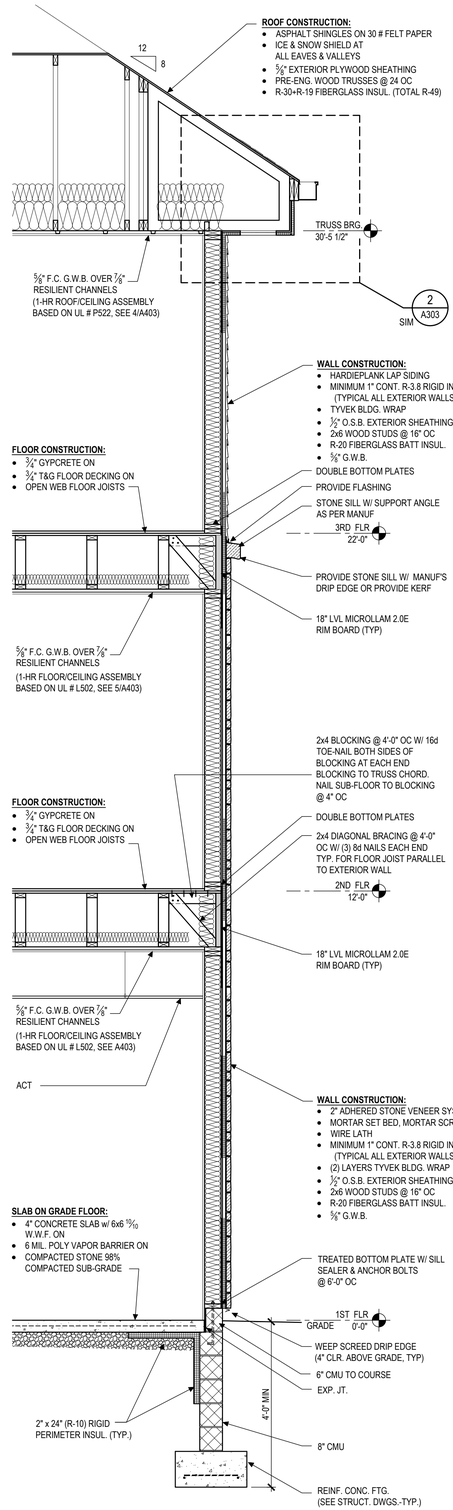

1 A304 **WALL SECTION**
SCALE: 1/2"=1'-0"

HEX 9 ARCHITECTS
5427 Woodside Drive
Osp, PA 17027
(717) 442-9034
(717) 285-0097 fx
An LLC Company
JOSEPH TURNOWCHYK, AIA, NCARB

STATE OF
NEW YORK
REGISTRATION #
036357-1

ALL CONTRACTORS ARE TO VERIFY ALL DIMENSIONS, FIELD CONDITIONS AND THE WORK OF OTHER TRADES BEFORE PROCEEDING WITH THEIR WORK.

This drawing is the exclusive property of HEX 9 ARCHITECTS and may not be reproduced in any form without written authorization from HEX 9 ARCHITECTS. Unauthorized reproduction or use of any or all parts of this drawing will constitute a violation of U.S. copyright laws.
COPYRIGHT © 2018 HEX 9 ARCHITECTS ALL RIGHTS RESERVED

REVISIONS

NUMBER	DATE	REVISED BY

DATE FEBRUARY 6, 2018
DRAWN BY RN
PROJECT NUMBER 16114

NEW FACILITY FOR:
SLEEP INN & SUITES
635 ELMIRA ROAD
ITHACA, NEW YORK 14850
CHOICE PROPERTY I.D. # NY701

BUILDING SECTION & DETAILS

A304
DRAWING NUMBER

FINAL DRAWINGS

2018-10-14 SLEEP INN - ITHACA, NY\PRODUCTION\A304 SECTIONS.DWG 8/31/18 9:45 AM PRINTED BY: GEROK

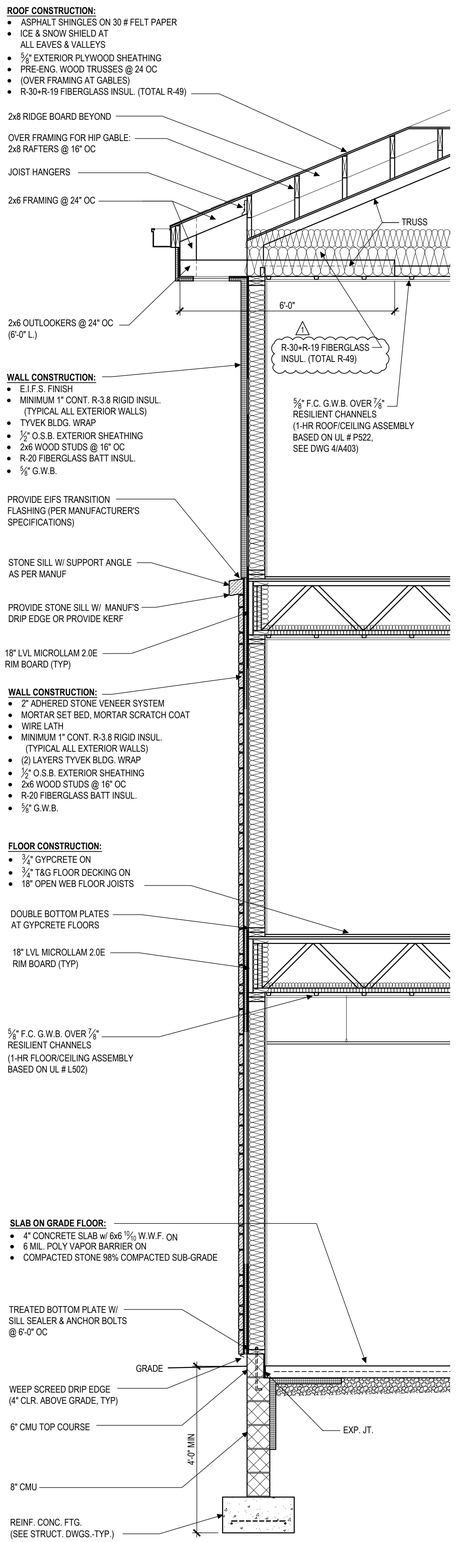

3 A305 **WALL SECTION**
SCALE: 1/2"=1'-0"

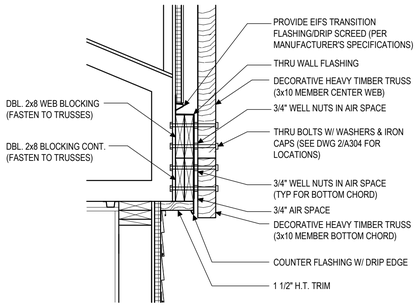

6 A305 **H.T. TRUSS WEB BLOCKING DETAIL**
SCALE: 1"=1'-0"

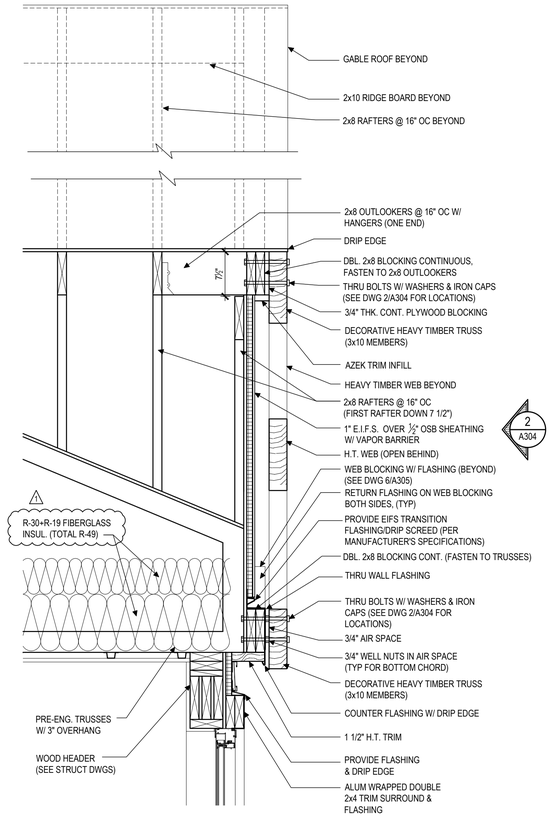

2 A305 **GABLE / H.T. TRUSS DETAIL**
SCALE: 1"=1'-0"

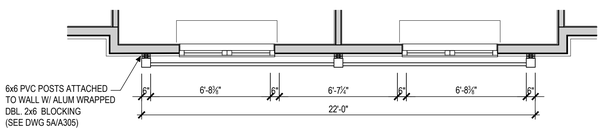

5 A305 **DECORATIVE RAILING PLAN VIEW**
SCALE: 1/4"=1'-0"

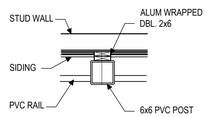

5A A305 **PLAN DETAIL**
SCALE: 1/2"=1'-0"

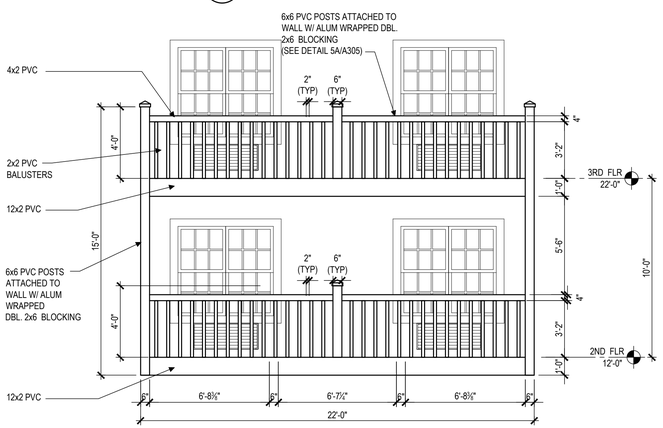

4 A305 **DECORATIVE PVC RAILING ELEVATION**
SCALE: 1/4"=1'-0"

NOTE: USE CONCEALED FASTENERS FOR PVC RAILING ASSEMBLY

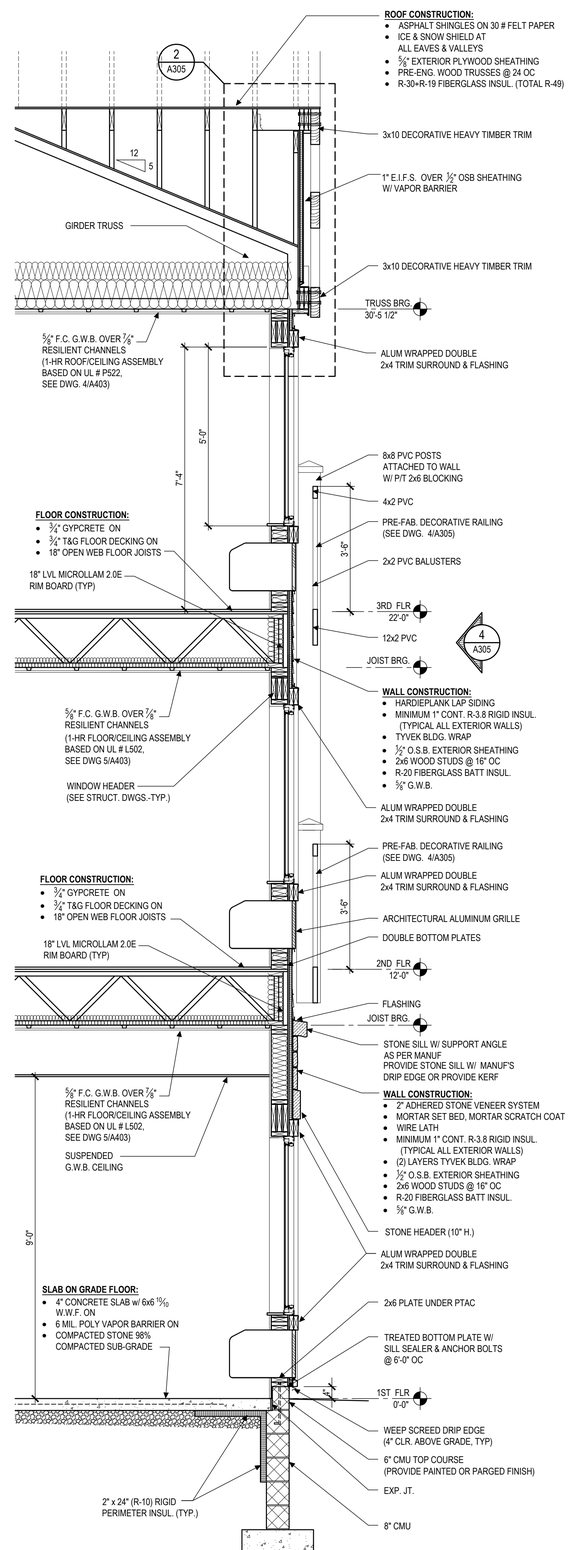

1 A305 **WALL SECTION**
SCALE: 1/2"=1'-0"

FINAL DRAWINGS

HEX 9 ARCHITECTS
5427 Woodside Drive
Gap, PA 17527
(717) 442-9094
(717) 283-0097 fx
An LLC Company
JOSEPH TURNOWCHYK, AIA, NCARB

STATE OF NEW YORK REGISTRATION # 036357-1

ALL CONTRACTORS ARE TO VERIFY ALL DIMENSIONS, FIELD CONDITIONS AND THE WORK OF OTHER TRADES BEFORE PROCEEDING WITH THEIR WORK.

This drawing is the exclusive property of HEX 9 ARCHITECTS and may not be reproduced in any form without written authorization from HEX 9 ARCHITECTS. Unauthorized reproduction or use of any or all parts of this drawing will constitute a violation of U.S. copyright laws.
COPYRIGHT © 2018 HEX 9 ARCHITECTS ALL RIGHTS RESERVED

REVISIONS

NUMBER	DATE	REVISED BY
1	6-01-2018	RN

DATE	FEBRUARY 6, 2018
DRAWN BY	RN
PROJECT NUMBER	16114

NEW FACILITY FOR:
SLEEP INN & SUITES
635 ELMIRA ROAD
ITHACA, NEW YORK 14850
CHOICE PROPERTY I.D. # NY701

SECTION & DETAILS

A305
DRAWING NUMBER

12/20/18 H:\4 SLEEP INN - ITHACA, NY\PRODUCTION\ASSI\SECTION.DWG 10-31-18 4:46 AM PRINTED BY: JSEIDE

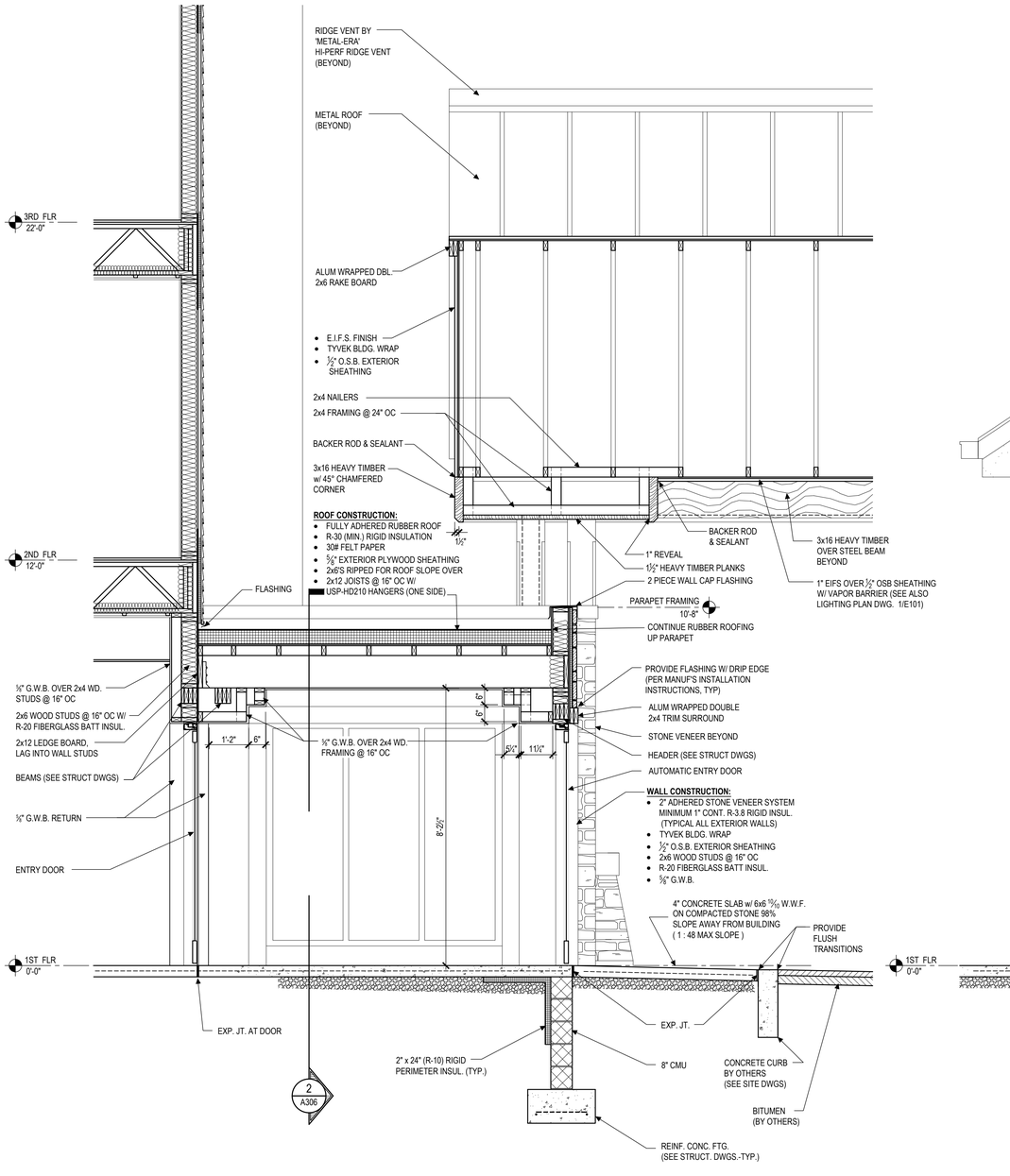

1 A306 VESTIBULE/PORTE COCHERE SECTION

SCALE: 1/2"=1'-0"

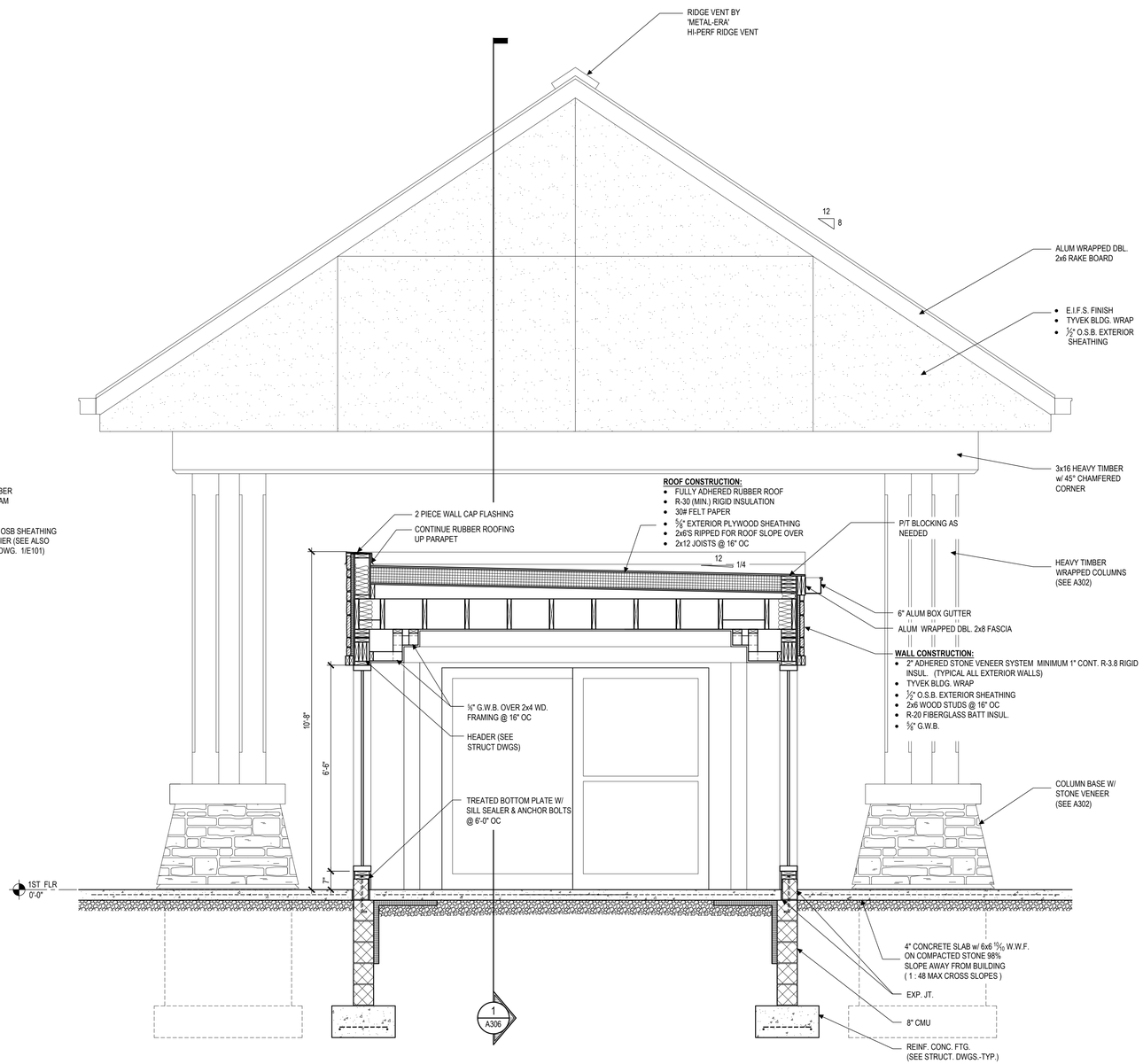

2 A306 VESTIBULE SECTION & PORTE COCHERE ELEVATION

SCALE: 1/2"=1'-0"

HEX 9 ARCHITECTS
An LLC Company
5427 Woodside Drive
Gap, PA 17527
(717) 442-9034
(717) 285-0097 fx
JOSEPH TURNOWCHYK, AIA, NCARB

STATE OF
NEW YORK
REGISTRATION #
036357-1

ALL CONTRACTORS ARE TO VERIFY ALL DIMENSIONS, FIELD CONDITIONS AND THE WORK OF OTHER TRADES BEFORE PROCEEDING WITH THEIR WORK.

This drawing is the exclusive property of HEX 9 ARCHITECTS and may not be reproduced in any form without written authorization from HEX 9 ARCHITECTS. Unauthorized reproduction or use of any or all parts of this drawing will constitute a violation of U.S. copyright laws.
COPYRIGHT © 2018 HEX 9 ARCHITECTS ALL RIGHTS RESERVED

REVISIONS

NUMBER	DATE	REVISED BY

DATE FEBRUARY 6, 2018
DRAWN BY RN
PROJECT NUMBER 16114

NEW FACILITY FOR:
SLEEP INN & SUITES
635 ELMIRA ROAD
ITHACA, NEW YORK 14850
CHOICE PROPERTY I.D. # NY701

VESTIBULE SECTIONS

A306
DRAWING NUMBER

FINAL DRAWINGS

2018-04-14 SLEEP INN - ITHACA, NY\PRODUCTION\ARCH\VESTIBULE SECTIONS.DWG 04-13-18 9:44 AM PRINTED BY: dd8096

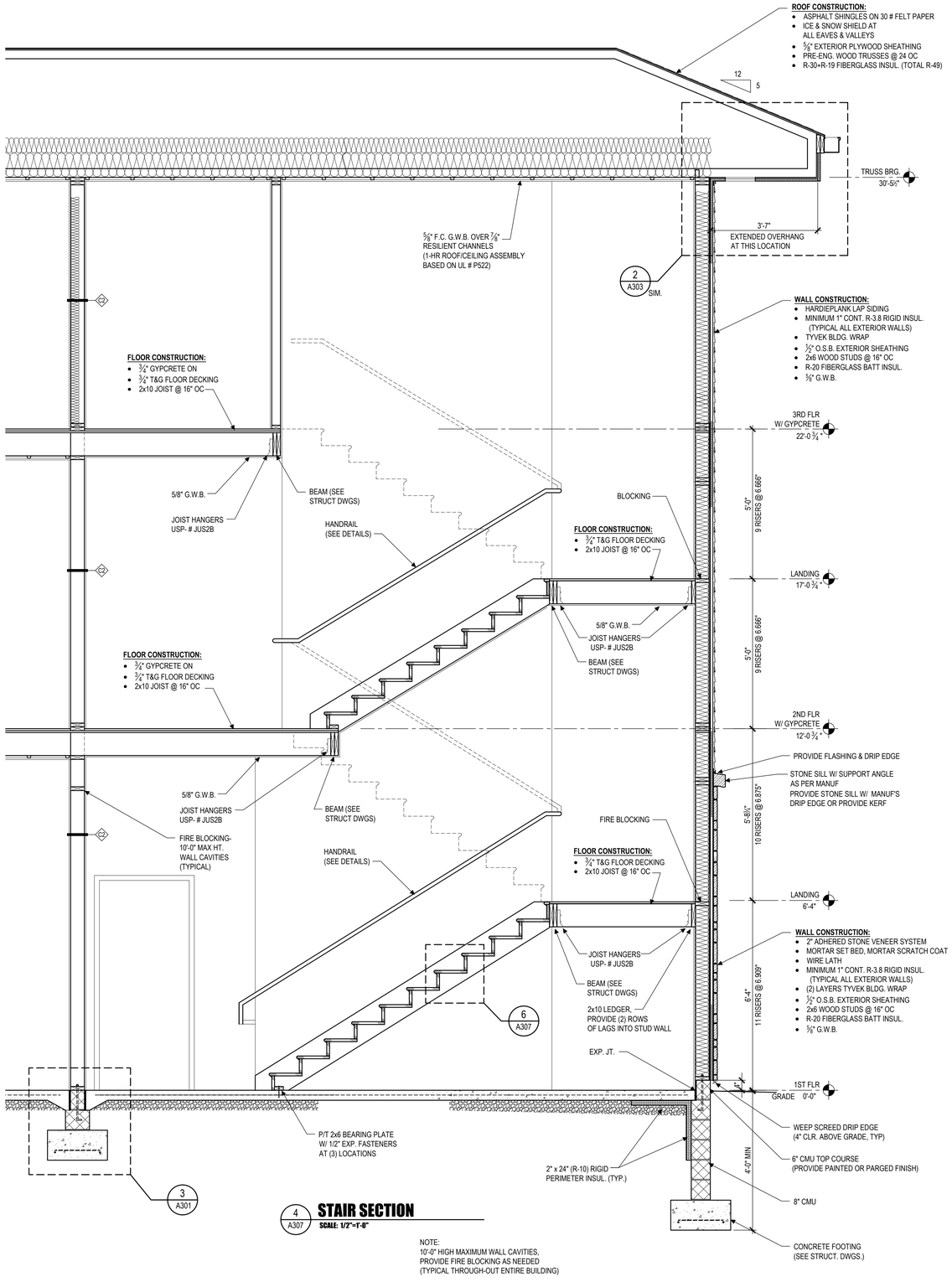

4 A307 STAIR SECTION
SCALE: 1/2"=1'-0"

NOTE:
10'-0" HIGH MAXIMUM WALL CAVITIES, PROVIDE FIRE BLOCKING AS NEEDED (TYPICAL THROUGH-OUT ENTIRE BUILDING)

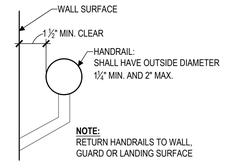

7 A307 WALL MOUNTED HANDRAIL DETAIL
SCALE: 3"=1'-0"

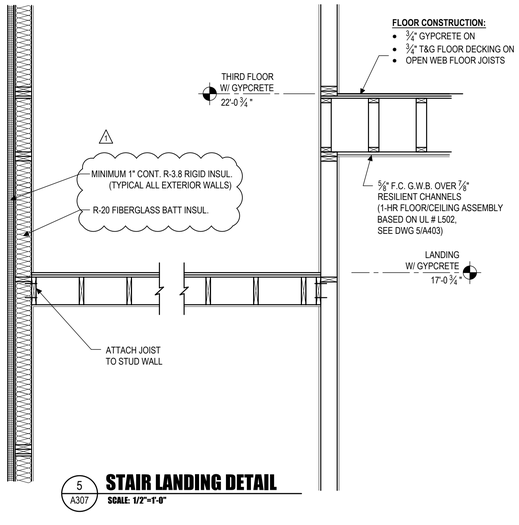

5 A307 STAIR LANDING DETAIL
SCALE: 1/2"=1'-0"

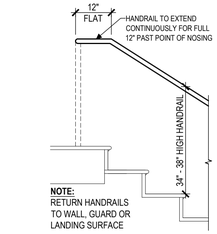

ANSI 2009 SECTION 505.10.2

8 A307 HANDRAIL EXTENSION DETAIL AT TOP RISER
SCALE: 1/2"=1'-0"

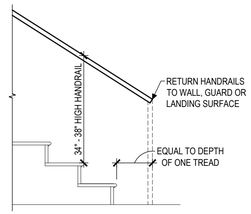

ANSI 2009 SECTION 505.10.3

9 A307 HANDRAIL EXTENSION DETAIL AT BOTTOM RISER
SCALE: 1/2"=1'-0"

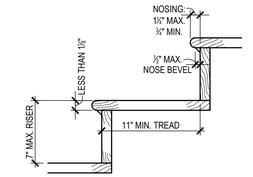

6 A307 WOOD RISER/TREAD DETAIL
SCALE: 11/2"=1'-0"

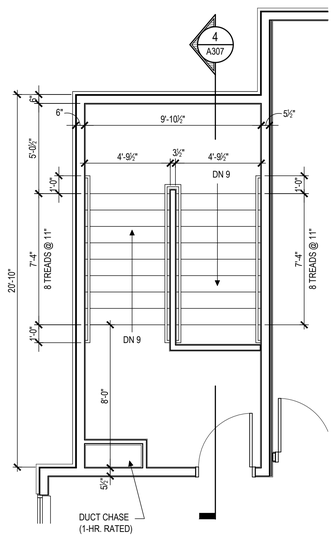

3 A307 THIRD FLOOR STAIR PLAN
SCALE: 1/4"=1'-0"

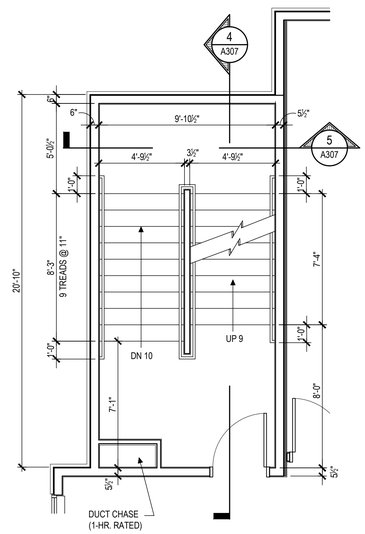

2 A307 SECOND FLOOR STAIR PLAN
SCALE: 1/4"=1'-0"

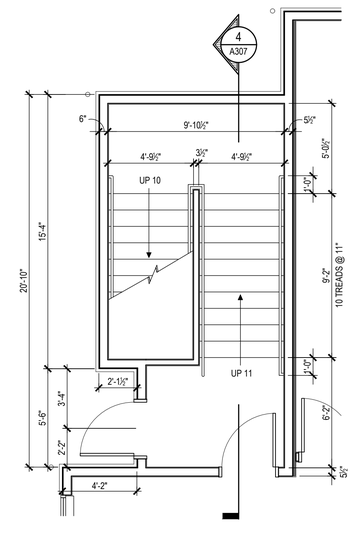

1 A307 FIRST FLOOR STAIR PLAN
SCALE: 1/4"=1'-0"

GENERAL NOTES

1. G.C. IS RESPONSIBLE TO FIELD VERIFY ALL DIMENSIONS PRIOR TO FABRICATION AND PLACEMENT OF NEW STRUCTURE.
2. DIMENSIONS ARE SHOWN TO FACE OF ROUGH FRAMING AND OR C.M.U./CONCRETE (U.N.O.)
3. PROVIDE PRESSURE TREATED PLATES WHERE WOOD CONTACTS CONCRETE AND/OR MASONRY. (TYP.)

FINAL DRAWINGS

HEX 9 ARCHITECTS
An LLC Company
5427 Woodside Drive
Gap, PA 17527
(717) 442-9034
(717) 283-0097 fx
JOSEPH TURNOWCHYK, AIA, NCARB

STATE OF NEW YORK REGISTRATION # 036357-1

ALL CONTRACTORS ARE TO VERIFY ALL DIMENSIONS, FIELD CONDITIONS AND THE WORK OF OTHER TRADES BEFORE PROCEEDING WITH THEIR WORK.

This drawing is the exclusive property of HEX 9 ARCHITECTS and may not be reproduced in any form without written authorization from HEX 9 ARCHITECTS. Unauthorized reproduction or use of any or all parts of this drawing will constitute a violation of U.S. copyright laws.
COPYRIGHT © 2018 HEX 9 ARCHITECTS ALL RIGHTS RESERVED

REVISIONS

NUMBER	DATE	REVISED BY
1	6-01-2018	RN

DATE FEBRUARY 6, 2018
DRAWN BY CMT
PROJECT NUMBER 16114

NEW FACILITY FOR:
SLEEP INN & SUITES CHOICE PROPERTY I.D. # NY701
635 ELMIRA ROAD
ITHACA, NEW YORK 14850

STAIR SECTIONS & DETAILS

A307
DRAWING NUMBER

D:\16114 SLEEP INN - ITHACA, NY\PRODUCTION\ASSY STAIR SECTIONS.DWG 02-21-18 9:43 AM PRINTED BY: JSORG

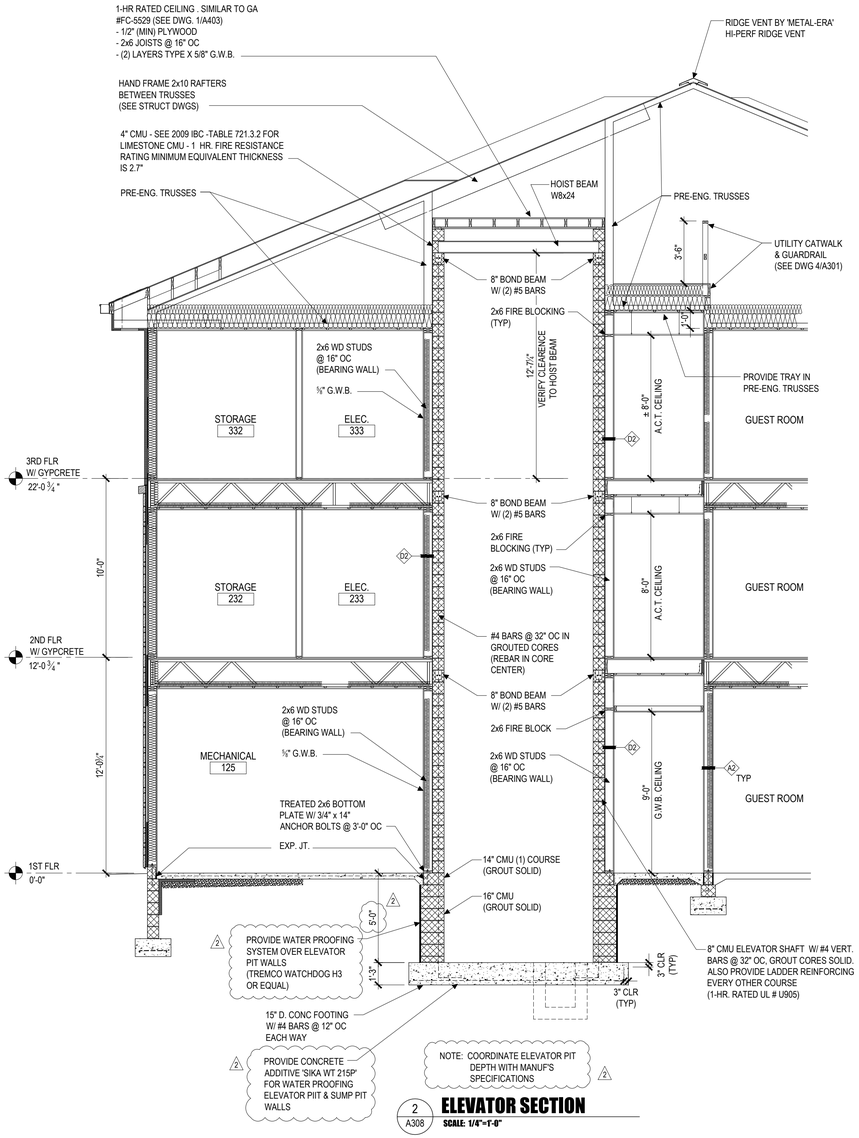

2 / A308 **ELEVATOR SECTION**
SCALE: 1/4"=1'-0"

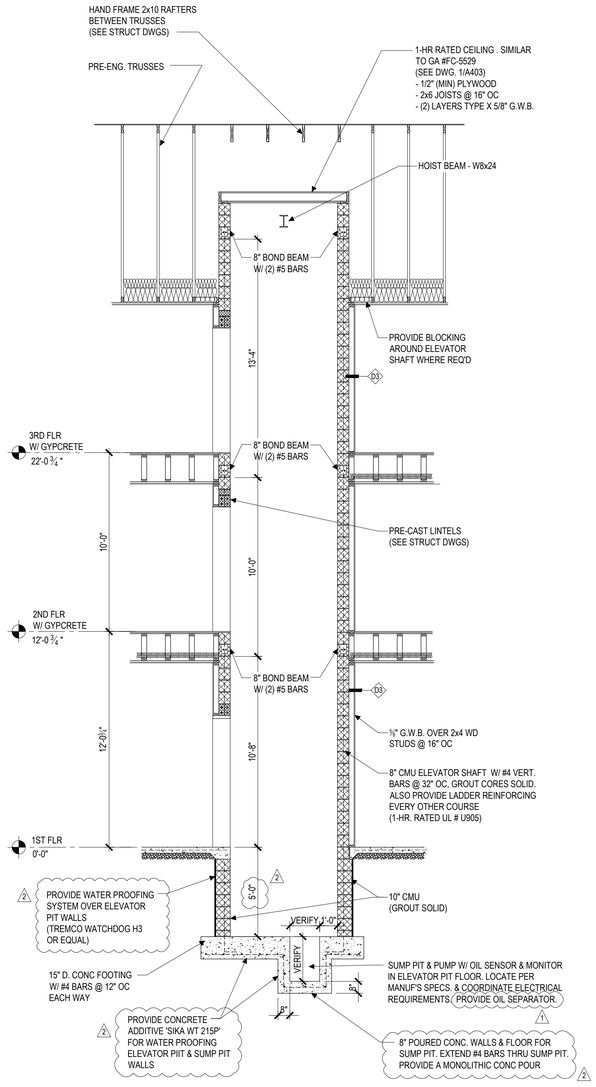

3 / A308 **ELEVATOR SECTION**
SCALE: 1/4"=1'-0"

NOTE:
PROVIDE SMOKE DETECTOR ON CEILING ON ELEVATOR SHAFT (INTERFACE W/ FIRE ALARM SYSTEM)

NOTE:
COORDINATE ELEVATOR PIT DEPTH WITH MANUF'S SPECIFICATIONS. COORDINATE SUMP PUMP PIT DIMENSIONS W/ MANUF'S SPECIFICATIONS

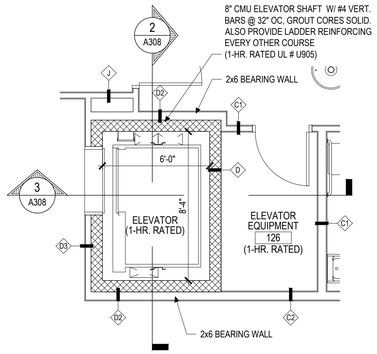

FIRST FLOOR ELEVATOR & EQUIPMENT ROOM PLAN
1 / A308 SCALE: 1/4"=1'-0"

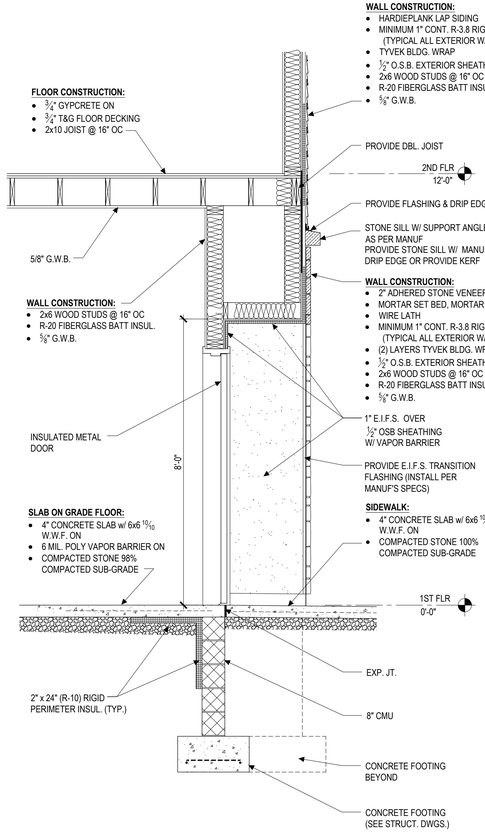

4 / A308 **WALL SECTION**
SCALE: 1/2"=1'-0"

HEX 9 ARCHITECTS
5427 Woodside Drive
Gap, PA 17527
(717) 442-9034
(717) 283-0097 fx
An LLC Company
JOSEPH TURNOWCHYK, AIA, NCARB

STATE OF NEW YORK REGISTRATION # 036357-1

ALL CONTRACTORS ARE TO VERIFY ALL DIMENSIONS, FIELD CONDITIONS AND THE WORK OF OTHER TRADES BEFORE PROCEEDING WITH THEIR WORK.

This drawing is the exclusive property of HEX 9 ARCHITECTS and may not be reproduced in any form without written authorization from HEX 9 ARCHITECTS. Unauthorized reproduction or use of any or all parts of this drawing will constitute a violation of U.S. copyright laws.

COPYRIGHT © 2018 HEX 9 ARCHITECTS ALL RIGHTS RESERVED

REVISIONS

NUMBER	DATE	REVISED BY
1	6-01-2018	RN
2	7-10-2018	RN

DATE FEBRUARY 6, 2018
DRAWN BY CMT
PROJECT NUMBER 16114

NEW FACILITY FOR:
SLEEP INN & SUITES CHOICE PROPERTY I.D. # NY701
635 ELMIRA ROAD
ITHACA, NEW YORK 14850

ELEVATOR SECTIONS & DETAILS

A308
DRAWING NUMBER

FINAL DRAWINGS

20180614 SLEEP INN - ITHACA, NY\PRODUCTION\ASM ELEVATOR SECTIONS.DWG 07-10-18 9:37 PM PRINTED BY USER

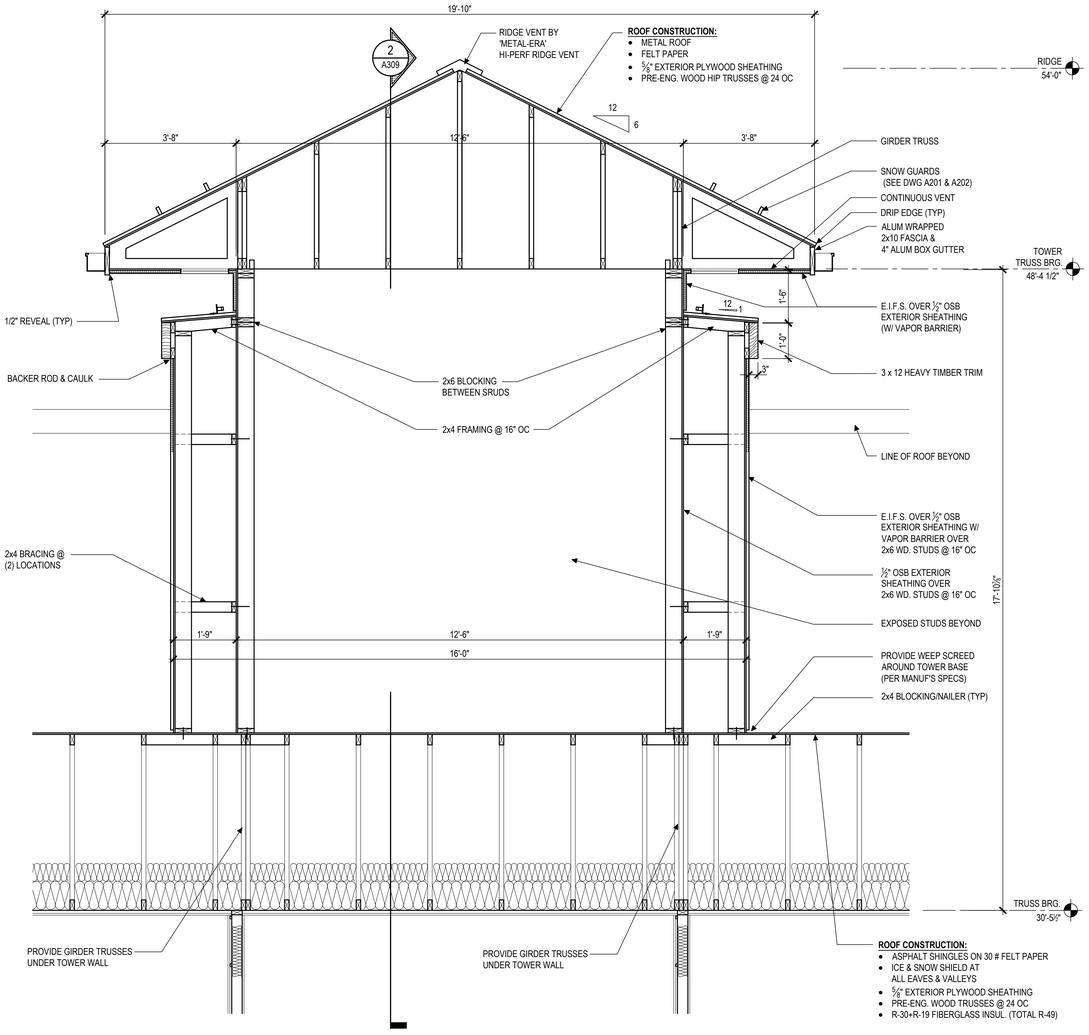

1 A309 **TOWER SECTION**
SCALE: 1/2"=1'-0"

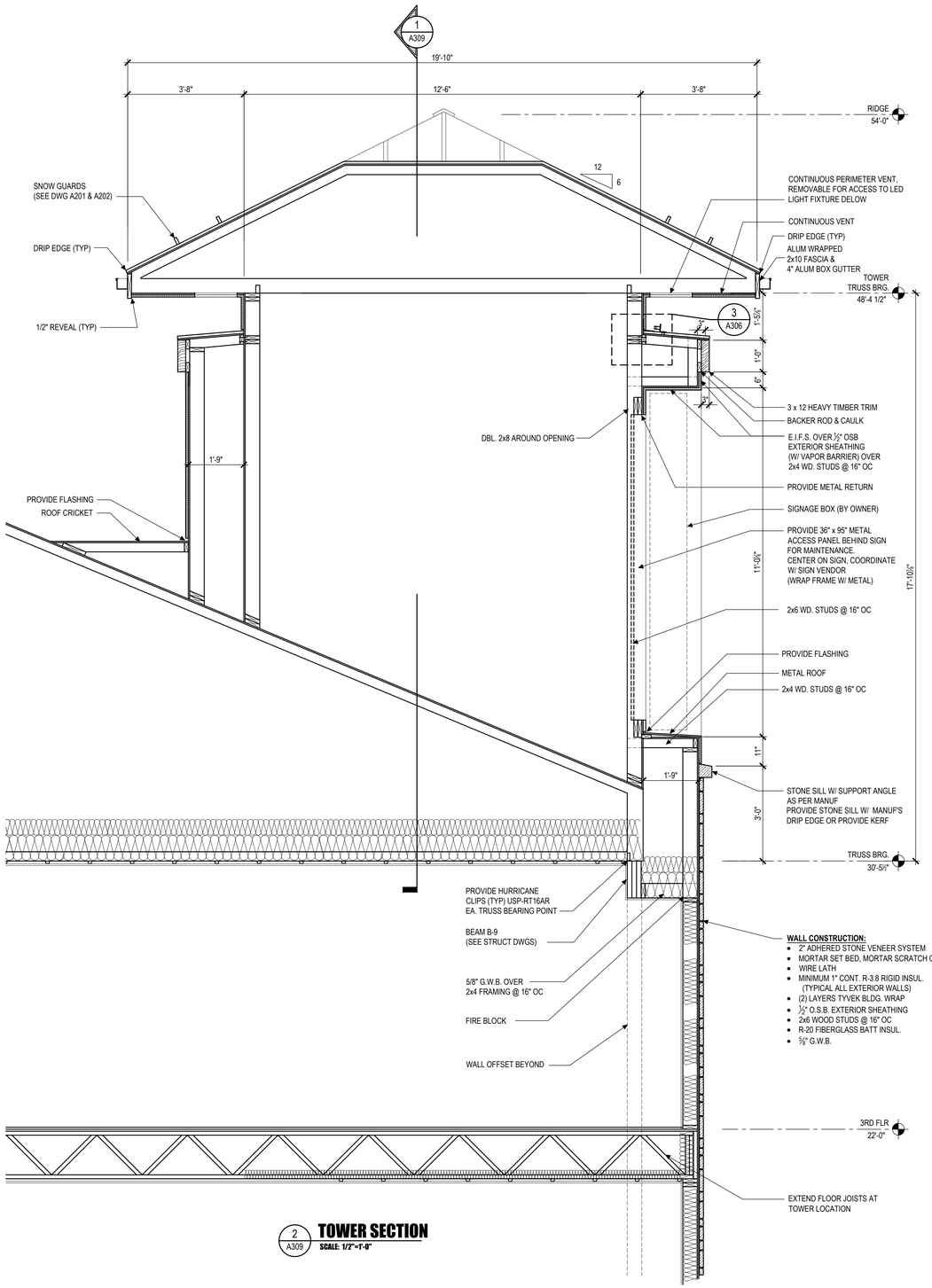

2 A309 **TOWER SECTION**
SCALE: 1/2"=1'-0"

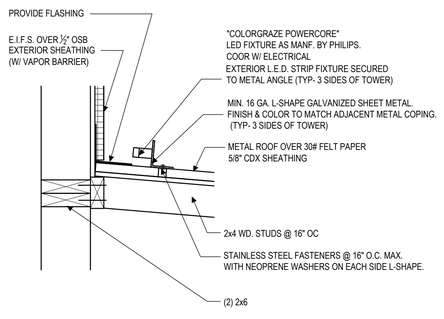

3 A309 **LED LIGHT / FLASHING DETAIL**
SCALE: 1 1/2"=1'-0"

HEX 9 ARCHITECTS
5427 Woodside Drive
Gap, PA 17527
(717) 442-9034
(717) 283-0097 fx
An LLC Company
JOSEPH TURNOWCHYK, AIA, NCARB

STATE OF
NEW YORK
REGISTRATION #
036357-1

ALL CONTRACTORS ARE TO VERIFY ALL DIMENSIONS, FIELD CONDITIONS AND THE WORK OF OTHER TRADES BEFORE PROCEEDING WITH THEIR WORK.

This drawing is the exclusive property of HEX 9 ARCHITECTS and may not be reproduced in any form without written authorization from HEX 9 ARCHITECTS. Unauthorized reproduction or use of any or all parts of this drawing will constitute a violation of U.S. copyright laws.
COPYRIGHT © 2018 HEX 9 ARCHITECTS ALL RIGHTS RESERVED

REVISIONS

NUMBER	DATE	REVISED BY

DATE	FEBRUARY 6, 2018
DRAWN BY	RN
PROJECT NUMBER	16114

NEW FACILITY FOR:
SLEEP INN & SUITES CHOICE PROPERTY I.D. # NY701
635 ELMIRA ROAD
ITHACA, NEW YORK 14850

TOWER SECTIONS & DETAILS

A309
DRAWING NUMBER

FINAL DRAWINGS

2018-02-14 SLEEP INN - ITHACA, NY\PRODUCTION\A309 TOWER SECTIONS.DWG 2-13-18 9:40 AM PRINTED BY: JDS/RB

DOOR SCHEDULE

	MARK	SIZE	DOOR	FRAME	TYPE	HARDWARE	FIRE RATING	REMARKS
GUEST ROOMS	G-1	3'-0" x 6'-8"	S.C. WOOD	METAL	F	1,6,18,21,22	20 MINUTE	GUEST ROOM ENTRY DOORS W/ IN-DOOR VIEWER
	G-2	3'-0" x 6'-8"	S.C. WOOD	METAL	A	1,6,9,11	—	GUEST ROOM BATHROOM DOORS
	G-3	3'-0" x 6'-8"	S.C. WOOD	METAL	A		45 MINUTE	GUEST ROOM CONNECTING DOORS
FIRST FLOOR	110-1	± 8'-6" x 7'-0"	ALUM / GLASS	ALUM	D	23,24	—	AUTOMATIC SLIDER
	110-2	± 8'-6" x 7'-0"	ALUM / GLASS	ALUM	D		—	AUTOMATIC SLIDER W/ GRAPHICS
	113-1	3'-0" x 6'-8"	S.C. WOOD	METAL	A	1,11,18,21	—	PRIVACY LOCK ON RECEPTION SIDE
	113-2	3'-0" x 6'-8"	S.C. WOOD	METAL	A	1,11,18	—	PRIVACY LOCK ON RECEPTION SIDE
	114-1	3'-0" x 7'-0"	ALUM / GLASS	ALUM	C	1,5,6,10,17	—	W/ 16" SIDELIGHT, SEE NOTE 4
	116-1	3'-0" x 6'-8"	S.C. WOOD	METAL	A	1,10,18	—	
	117-1	3'-0" x 7'-0"	ALUM / GLASS	ALUM	C	1,5,6,7,12,15,17,21,24	—	W/ 16" SIDELIGHT, SEE NOTE 4, CARD READER ON EXTERIOR
	117-2	3'-0" x 6'-8"	ALUM / GLASS	ALUM	F	1,6,9,21	—	CARD READER IN CORRIDOR
	118-1	3'-6" x 7'-0"	INSULATED METAL	METAL	A	1,5,10,15,17	—	
	118-2	3'-6" x 6'-8"	METAL	METAL	A	1,10,18	—	
	119-1	3'-0" x 6'-8"	ALUM / GLASS	ALUM	C	1,6,9,21	—	W/ 16" SIDELIGHT
	120-1	3'-0" x 6'-8"	S.C. WOOD	METAL	A	1,6,11,18,26	—	
	121-1	3'-0" x 6'-8"	S.C. WOOD	METAL	A	1,6,11,18,25	—	
	122-1	3'-0" x 6'-8"	ALUM / GLASS	ALUM	C	1,6,9,18,21	—	W/ 16" SIDELIGHT
	123-1	3'-6" x 7'-0"	INSULATED METAL	METAL	A	1,5,10,15,17	—	
	125-1	3'-6" x 7'-0"	INSULATED METAL	METAL	A	1,5,10,15,17	—	
	125-2	3'-6" x 6'-8"	METAL	METAL	A	1,10	—	
	125-3	3'-6" x 6'-8"	METAL	METAL	A	1,10,18	—	
	126-1	3'-0" x 6'-8"	METAL	METAL	A	1,10	45 MINUTE	
	127-1	3'-0" x 6'-8"	S.C. WOOD	METAL	A	1,6,11,18,27	—	
	128-1	3'-6" x 6'-8"	S.C. WOOD	METAL	A	1,10,18,21	—	
	129-1	3'-6" x 6'-8"	METAL	METAL	A	1,10,18	—	
	130-1	± 2'-0" x 2'-0"	METAL	METAL	G	1,6,9	60 MINUTE	LAUNDRY CHUTE - OPENING MINIMUM 42" A.F.F.
	132-1	3'-0" x 6'-8"	S.C. WOOD	METAL	E	1,10,18	—	
	132-2	3'-0" x 6'-8"	S.C. WOOD	METAL	E	1,10,18	—	
	132-3	(2) 2'-0" x 6'-8"	S.C. WOOD	METAL	A	2,10,16	—	
	133-1	(2) 3'-0" x 6'-8"	S.C. WOOD	METAL	A	2,9,16	—	
	134-1	3'-0" x 6'-8"	S.C. WOOD	METAL	A	1,9,18	—	
	135-1	3'-0" x 6'-8"	S.C. WOOD	METAL	A	1,9,18	—	
	136-1	3'-0" x 6'-8"	S.C. WOOD	METAL	A	1,9,18	—	
	137-1	3'-0" x 6'-8"	S.C. WOOD	METAL	A	1,10,18,21	—	
	142-1	3'-0" x 7'-0"	INSULATED METAL	METAL	A	1,5,6,7,17,18,21,24	—	
	142-2	3'-0" x 6'-8"	METAL	METAL	B	1,6,8,18	60 MINUTE	
	143-1	3'-0" x 7'-0"	INSULATED METAL	METAL	A	1,5,6,7,17,18,24	—	
	143-2	3'-0" x 6'-8"	METAL	METAL	B	1,6,8,18	60 MINUTE	
	144-1	3'-6" x 6'-8"	METAL	METAL	A	1,10,18	—	
SECOND FLOOR	232-1	3'-0" x 6'-8"	S.C. WOOD	METAL	A	1,6,10,18,21	20 MINUTE	
	233-1	3'-0" x 6'-8"	S.C. WOOD	METAL	A	1,10	—	
	234-1	3'-6" x 6'-8"	S.C. WOOD	METAL	A	1,6,10,18,21	20 MINUTE	
	235-1	± 2'-0" x 2'-0"	METAL	METAL	G	1,6,9	60 MINUTE	LAUNDRY CHUTE - OPENING MINIMUM 42" A.F.F.
	237-1	3'-0" x 6'-8"	METAL	METAL	B	1,6,8,18,28	60 MINUTE	
	238-1	3'-0" x 6'-8"	METAL	METAL	B	1,6,8,18,28	60 MINUTE	
THIRD FLOOR	332-1	3'-0" x 6'-8"	S.C. WOOD	METAL	A	1,6,10,18,21	20 MINUTE	
	333-1	3'-0" x 6'-8"	S.C. WOOD	METAL	A	1,10	—	
	334-1	3'-6" x 6'-8"	S.C. WOOD	METAL	A	1,6,10,18,21	20 MINUTE	
	335-1	± 2'-0" x 2'-0"	METAL	METAL	G	1,6,9	60 MINUTE	LAUNDRY CHUTE - OPENING MINIMUM 42" A.F.F.
	337-1	3'-0" x 6'-8"	METAL	METAL	B	1,6,8,18,28	60 MINUTE	
	338-1	3'-0" x 6'-8"	METAL	METAL	B	1,6,8,18,28	60 MINUTE	

NOTES

1. ALL EXTERIOR DOORS SHALL BE INSULATED.
2. PROVIDE TACTILE H/C ROOM IDENTIFICATION SIGNAGE (SEE A/A401).
3. PROVIDE TACTILE EXIT SIGNAGE (SEE A/A401) AT ALL NEW AND EXISTING EXIT ACCESS AND EXIT DOORS.
4. IF A KEYED OPERATED BOLT IS USED PROVIDE A LOCK WHICH IS READILY DISTINGUISHABLE AS LOCKED.
5. VERIFY FINAL LOCKSET ASSIGNMENTS WITH OWNER.
6. SEE 2015 IBC TABLE 1020.1 FOR REQUIRED CORRIDOR RATING & TABLE 716.5 FOR OPENING PROTECTIVE RATINGS
7. CORPORATE SIGNAGE TO BE PROVIDED & COORDINATED BY OTHERS

DOOR HARDWARE SCHEDULE

MARK	TYPE
1	1 1/2 PAIR BUTT HINGES
2	3 PAIR BUTT HINGES
3	SPRING HINGES
4	180° HINGES
5	THRESHOLD (ADA APPROVED)
6	CLOSER (ADA APPROVED)
7	PANIC HARDWARE
8	FIRE EXIT HARDWARE
9	LEVER LATCHSET
10	LEVER LOCKSET
11	PRIVACY LEVER LOCKSET
12	PULL HANDLE
13	PUSH BAR-PULL HANDLE
14	SINGLE CYLINDER DEADBOLT w/ THUMB TURN
15	DOUBLE CYLINDER DEADBOLT
16	DOOR ASTRAGAL
17	WEATHER STRIPPING/DRIP EDGE
18	WALL STOP / FLOOR STOP
19	KICK PLATE
20	BI-FOLD HARDWARE (ADA APPROVED)
21	ELECTRONIC KEYLESS LEVER LOCKSET (KABA ILCO E-760)
22	DOOR VIEWER
23	EXTERIOR ACCESSIBLE ENTRANCE SIGN (SEE A\A401)
24	INTERIOR ACCESSIBLE EXIT SIGN (SEE A\A401)
25	A.D.A. ACCESSIBLE MEN'S RESTROOM SIGN (SEE A\A401 AND LARGE SCALE RESTROOM PLANS)
26	A.D.A. ACCESSIBLE WOMEN'S RESTROOM SIGN (SEE A\A401 AND LARGE SCALE RESTROOM PLANS)
27	A.D.A. ACCESSIBLE UNISEX RESTROOM SIGN (SEE A\A401 AND LARGE SCALE RESTROOM PLANS)
28	STAIR SIGN (SEE A\A401)

ADA BRAILLE IDENTIFICATION SIGNS

PROVIDE TACTILE SIGNS FOR ALL EGRESS EXITS & HANDICAP ACCESSIBLE RESTROOMS.

¼" THICK SIGNS W/ GRADE 2 BRAILLE (TYP)

1. CHARACTERS AND IDENTIFICATION SYMBOLS ARE TO BE DISTINCTLY DIFFERENT FROM THE BACKGROUND IN COLOR AND CONTRAST.
2. LETTERS AND NUMBERS ON SIGNS SHALL BE RAISED 1/32" MIN., SHALL BE A MIN. OF 5/8" HIGH AND MAX. OF 2" HIGH. CHARACTERS SHALL BE UPPERCASE AND SANS-SERIF ACCOMPANIED BY GRADE 2 BRAILLE.
3. PROVIDE IDENTIFICATION SIGN ON WALL TO LATCH SIDE OF DOOR. WHERE SIGNS ARE PROVIDED AT DOUBLE DOORS, THE SIGN SHALL BE TO THE RIGHT OF THE RIGHT HAND DOOR. WHERE NO WALL SPACE IS AVAILABLE SIGNS SHALL BE ON THE NEAREST ADJACENT WALL.

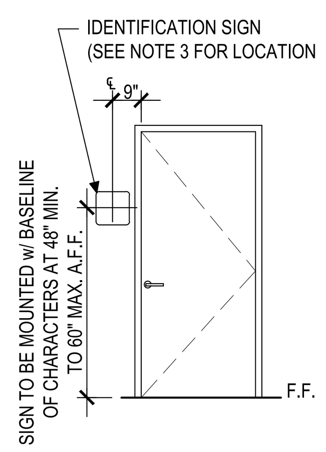

A / A401 **IDENTIFICATION SIGN ELEVATION**
SCALE: 1/4" = 1'-0"

WALL TYPES

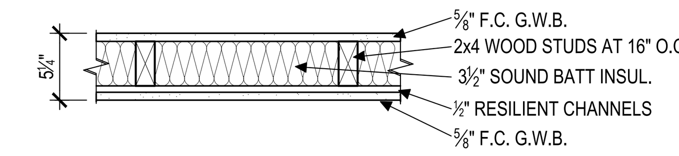

A1 30 MINUTED RATED WALL SIMILAR TO UL# U305 (SEE DWG 3/A403) STC RATING: 50-54 (PROVIDE 54 MIN. STC RATING)

A2 SIMILAR TO WALLTYPE 'A1' W/ 2x6 WOOD STUDS AT 16" OC

A3 1-HR. RATED WALL SIMILAR TO UL# U305 W/ 2x6 WOOD STUDS @ 16" OC (SEE DWG 3/A403)

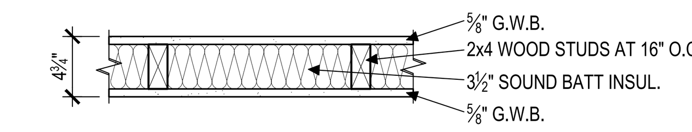

B1 W/ 3½" SOUND BATT INSUL.

B2 SIMILAR TO WALLTYPE 'B1' NO SOUND BATT INSUL. NEEDED (OPTIONAL)

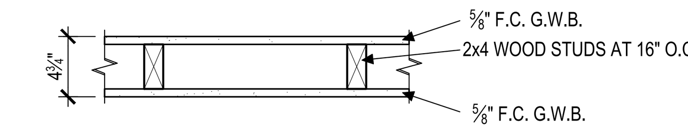

C1 1-HR. RATED WALL BASED ON UL# U305 W/ 2x4 WOOD STUDS @ 16" OC (SEE DWG 3/A403)

C2 1-HR. RATED WALL SIMILAR TO UL# U305 W/ 2x6 WOOD STUDS @ 16" OC (SEE DWG 3/A403)

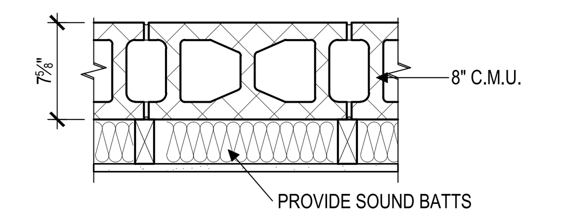

D 1-HR. RATED WALL BASED ON UL# U905 (CMU ONLY)

D2 WALL 'D' WITH 2x6 STUD WALL

D3 WALL 'D' WITH 2x4 STUD WALL

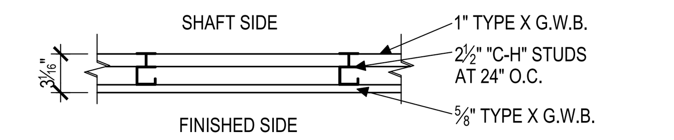

E 1-HOUR FIRE RATED SHAFT WALL: SIMILAR TO UL-U469 (SEE DWG 2/A403)

E1 3 5/8" METAL STUDS FOR LAUNDRY CHUTE

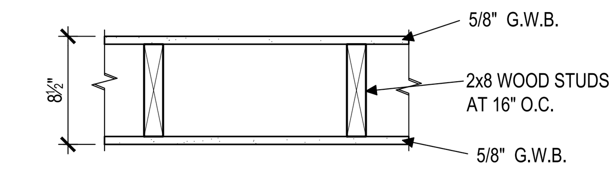

F PLUMBING / MECH. CHASE WALL (GUEST ROOMS)

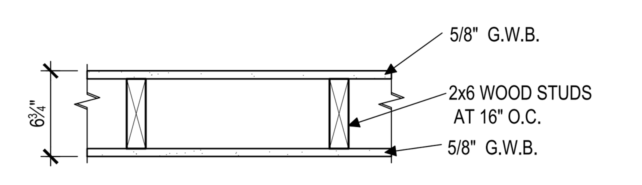

G

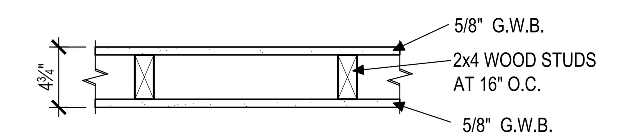

H1 PARTIAL WALL HEIGHT, 6'-5" AFF W/ STAINED WOOD CAP (SEE ALSO SHEET A511 FOR ELEVATIONS)

H2 PARTIAL WALL HEIGHT, 5'-0" AFF W/ STAINED WOOD CAP (SEE ALSO SHEET A511 FOR ELEVATIONS)

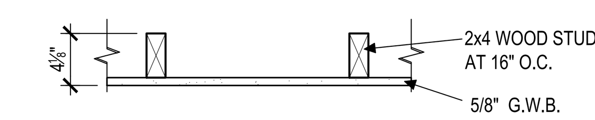

J

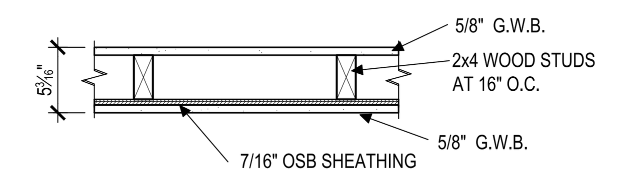

K SHEAR WALL (SEE STRUCT DWGS) (SEE S402 FOR SHEAR WALL DETAILS)

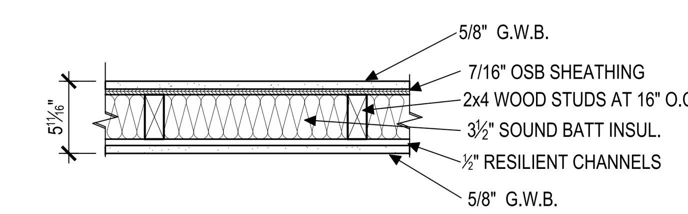

L SHEAR WALL (SEE STRUCT DWGS) SIMILAR TO WALL 'A1' (SEE S402 FOR SHEAR WALL DETAILS)

NOTES:

1. ALL FIRE RATED WALLS TO EXTEND TO ADJACENT RATED ASSEMBLIES OR TO UNDERSIDE OF DECK. (SEE SHEET A403 FOR RATED ASSEMBLY SPECIFICATIONS)
2. DIMENSIONS ARE SHOWN TO FINISHED SURFACES.
3. DIMENSIONS ARE APPROXIMATE. MATERIAL THICKNESS MAY VARY.
4. BASES VARY. SEE ROOM FINISH SCHEDULE.
5. PRESSURE TREATED BOTTOM PLATE (TYPICAL WHERE WOOD CONTACTS CONCRETE AND/OR MASONRY)
6. USE MOISTURE RESISTANT G.W.B IN ALL RESTROOMS & BATHROOMS, POOL ROOM 117, POOL EQUIPMENT ROOM 118, MECH RM 144 (WALLS & CEILINGS)
7. PROVIDE DOUBLE TOP PLATES FOR ALL BEARING WALLS

DOOR TYPES

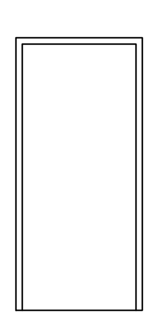

FLUSH

A

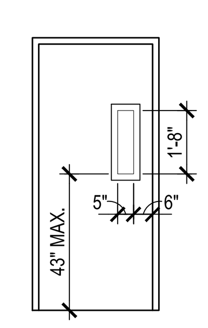

"FLUSH" 1-HR. FIRE RATED H.M. DOOR "PAINT FINISH" w/ FIRE RATED GLASS w/ METAL STOP

B

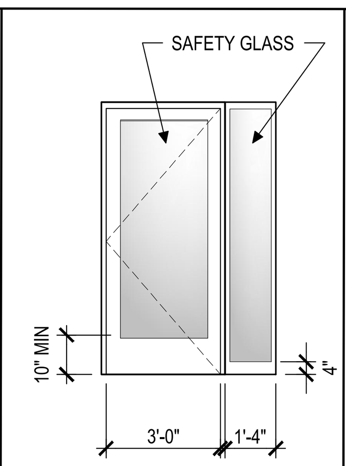

ALUM STOREFRONT

C

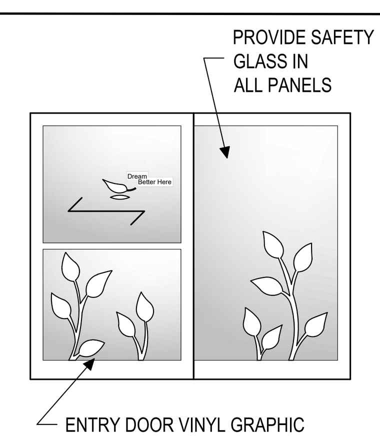

AUTOMATIC SLIDING ENTRY DOORS W/ EMERGENCY BREAK OPEN PANEL

D

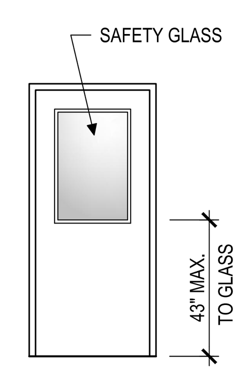

1/2 LITE TEMPERED GLASS

E

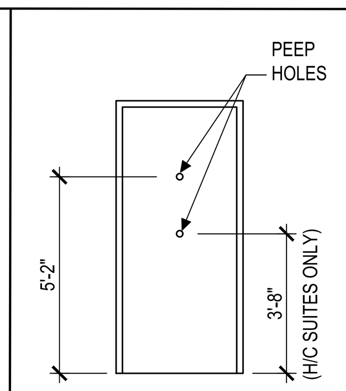

FLUSH SUITE DOORS W/ VIEWER

F

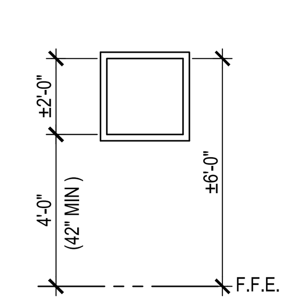

LAUNDRY CHUTE DOOR

G

WINDOW TYPES

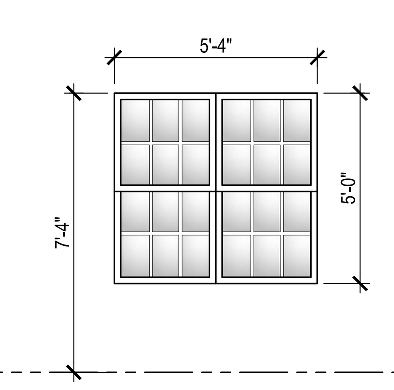

W1 FIXED TWIN DOUBLE HUNG - GUEST ROOMS

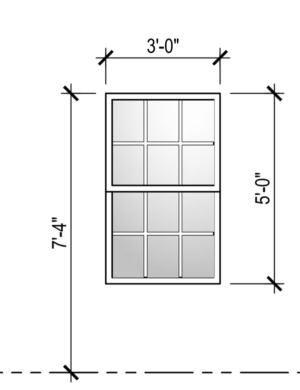

W2 FIXED DOUBLE HUNG - CORRIDORS

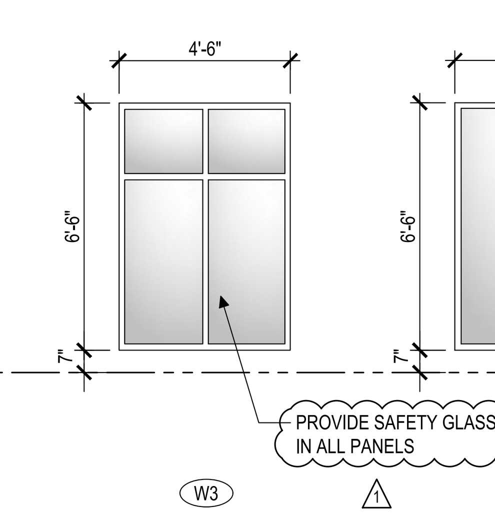

W3 ALUM. STOREFRONT

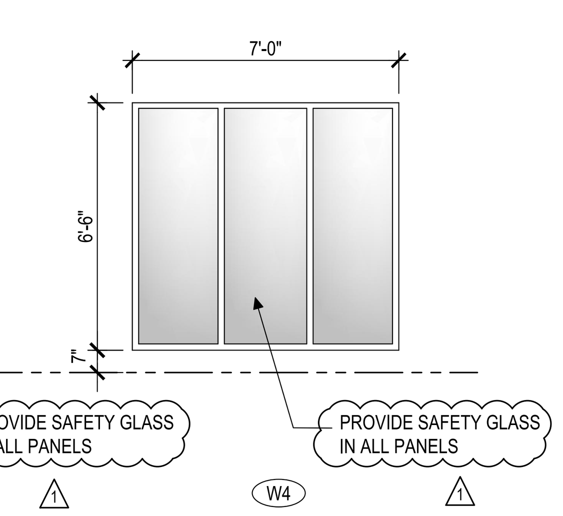

W4 ALUM. STOREFRONT

HEX 9 ARCHITECTS
ARCHITECTURE PLANNING
5427 Woodside Drive
Gap, PA 17527
(717) 442-9034
(717) 283-0097 fx
An LLC Company
JOSEPH TURNOWCHYK, AIA, NCARB

STATE OF NEW YORK REGISTRATION # 036357-1

ALL CONTRACTORS ARE TO VERIFY ALL DIMENSIONS, FIELD CONDITIONS AND THE WORK OF OTHER TRADES BEFORE PROCEEDING WITH THEIR WORK.

This drawing is the exclusive property of HEX 9 ARCHITECTS and may not be reproduced in any form without written authorization from HEX 9 ARCHITECTS. Unauthorized reproduction or use of any or all parts of this drawing will constitute a violation of U.S. copyright laws.

COPYRIGHT © 2018 HEX 9 ARCHITECTS ALL RIGHTS RESERVED

REVISIONS

NUMBER	DATE	REVISED BY
1	??-??-2018	RN

DATE	FEBRUARY 6, 2018
DRAWN BY	CMT
PROJECT NUMBER	16114

NEW FACILITY FOR:
SLEEP INN & SUITES CHOICE PROPERTY I.D. # NY701
635 ELMIRA ROAD
ITHACA, NEW YORK 14850

WALL TYPES, DOOR & WINDOW SCHEDULE

A401
DRAWING NUMBER

FINAL DRAWINGS

I:\2016\16114 SLEEP INN - ITHACA, NY\PRODUCTION\A401 SCHEDULES-WALL TYPES.DWG 05-31-18 9:43 AM PRINTED BY: USER06

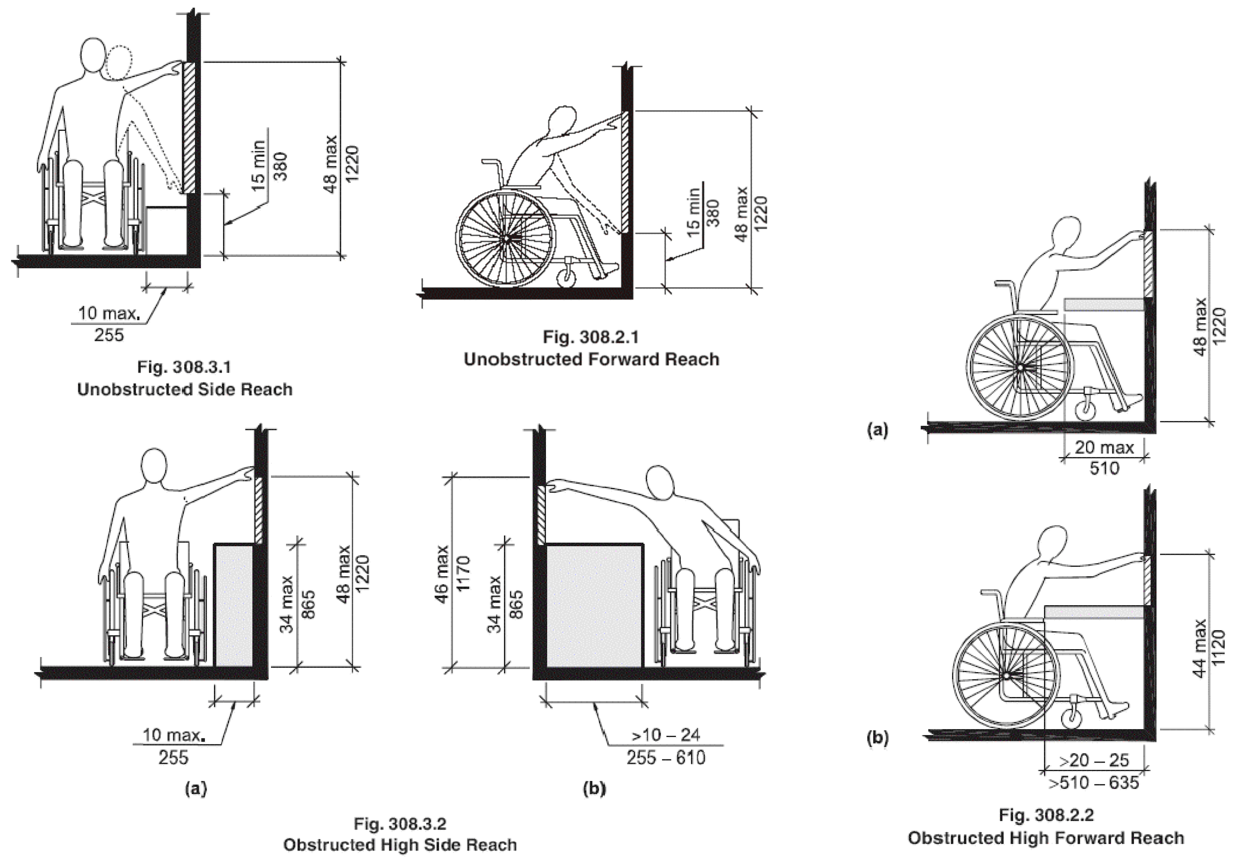

ALL CONSTRUCTION TO COMPLY WITH ANSI 2009 SECTIONS 308 AND 309

1 / A402 REACH DETAILS
SCALE: NTS

ALL NEW OR RELOCATED OPERATING COMPONENTS (SWITCHES, SECURITY SYSTEMS, FIRE PULLS, THERMOSTATS, FIRE EXTINGUISHERS, ETC), MUST BE 48" A.F.F. TO THE HIGHEST OPERATING BUTTONS OR UNIT; ICC A117.1 SECTIONS 308 AND 309

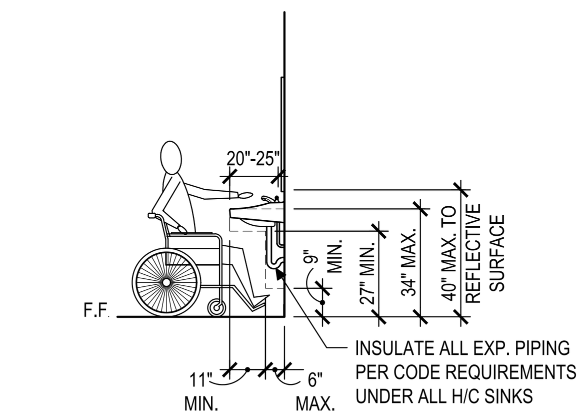

NOTE: DIMENSIONS ARE SHOWN TO FINISHED SURFACES

2 / A402 TYP. LAVATORY ELEVATION
SCALE: 1/4"=1'-0"

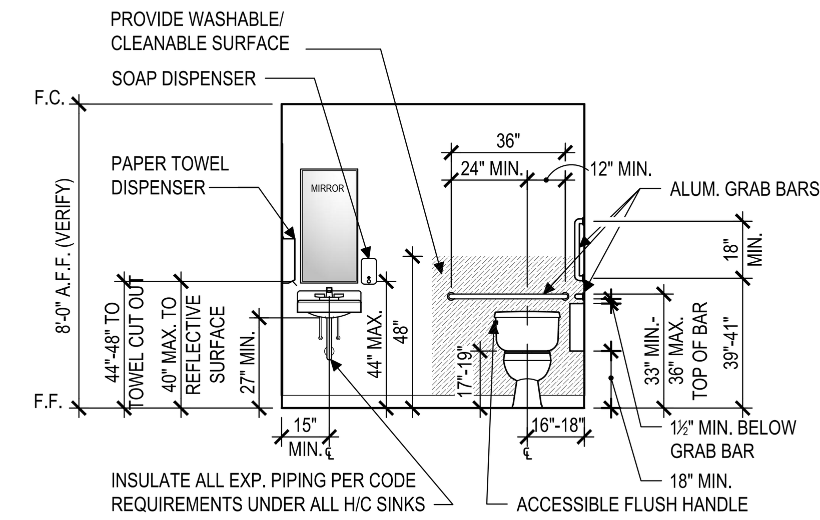

NOTE: DIMENSIONS ARE SHOWN TO FINISHED SURFACES

3 / A402 TYP. TOILET AND LAVATORY ELEVATION
SCALE: 1/4"=1'-0"

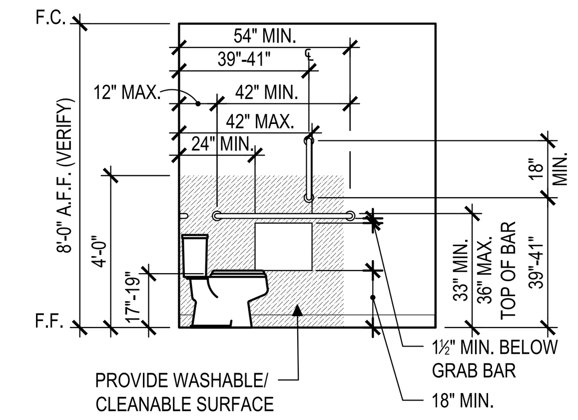

NOTE: DIMENSIONS ARE SHOWN TO FINISHED SURFACES

4 / A402 TYP. TOILET ELEVATION
SCALE: 1/4"=1'-0"

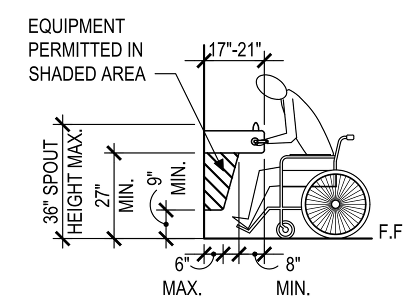

NOTE: DIMENSIONS ARE SHOWN TO FINISHED SURFACES

5 / A402 DRINKING FOUNTAIN SIDE ELEVATION
SCALE: 1/4"=1'-0"

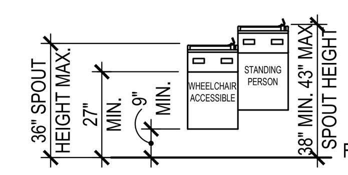

NOTE: DIMENSIONS ARE SHOWN TO FINISHED SURFACES

6 / A402 DRINKING FOUNTAIN FRONT ELEVATION
SCALE: 1/4"=1'-0"

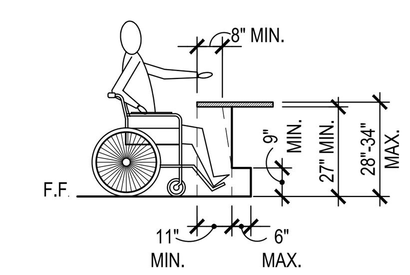

ICCA117.1 902 DINING SURFACES AND WORK SURFACES. 902.4 HEIGHT.
THE TOPS OF DINING SURFACES AND WORK SURFACES SHALL BE 28 INCHES (710 MM) MINIMUM AND 34 INCHES (865 MM) MAXIMUM IN HEIGHT ABOVE THE FLOOR.

7 / A402 TYP. DINING/WORK COUNTER ELEVATION
SCALE: 1/4"=1'-0"

A.D.A. NOTES

THE GENERAL CONTRACTOR SHALL ACQUAINT HIMSELF WITH THE HANDICAP REQUIREMENTS FOR THE APPLICABLE STATES AND
THE AMERICAN DISABILITIES ACT (A.D.A.) AND SHALL INSURE THAT THIS FACILITY WILL BE ACCESSIBLE. ACCORDING TO THE STRICTER REQUIREMENTS OF THE APPLICABLE STANDARDS. THE FOLLOWING IS A PARTIAL LIST OF REQUIREMENTS.

1. DOOR HARDWARE SHALL BE MOUNTED BETWEEN 36" AND 42" ABOVE FLOOR AND BE LEVER TYPE.
2. TOILETS:
   - A. LAVATORY TO HAVE LEVER HANDLES, SPRING FAUCETS OR SELF METERING FAUCETS.
   - B. A COAT HOOK 48" ABOVE THE FLOOR SHALL BE MOUNTED ON THE BACK SIDE OF THE HANDICAPPED STALL DOOR.
   - C. LOCATE THE WATER CLOSET 16"-18" FROM THE CENTER LINE OF THE FIXTURE TO THE WALL FINISH. THE SEAT WILL BE 17" TO 19" ABOVE THE FLOOR TO THE TOP OF SEAT.
   - D. PROVIDE ONE 42" LONG x 1½" OUTSIDE DIAMETER PEENED GRAB BAR 12" FROM THE BACK WALL 33"-36" TO TOP OF THE BAR PARALLEL TO AND ABOVE THE FLOOR. PROVIDE ONE 36" LONG x 1½" OUTSIDE DIAMETER PEENED GRAB BAR BEHIND THE TOILET, 1½" FROM THE WALL AT 6" FROM THE SIDE WALL. PROVIDE ONE VERTICAL 18" LONG x 1½" OUTSIDE DIAMETER PEENED GRAB BAR 39"-41" FROM THE BACK WALL AND 39"-41" A.F.F.
   - E. LAVATORY TO BE MOUNTED 34" (MAX.) ABOVE THE FINISHED FLOOR TO RIM WITH KNEE SPACE OF 30" IN WIDTH AND 27" IN CLEAR HEIGHT. (29" CLEAR UNDER FRONT EDGE)
   - F. INSTALL MIRROR 40" (MAX.) ABOVE THE FINISHED FLOOR (TO BOTTOM OF REFLECTIVE SURFACE) AND 72" TO TOP.
   - G. DISPENSERS TO BE MOUNTED A MAXIMUM OF 42" ABOVE THE FLOOR TO ALL OPERATING OR DISPENSING SLOTS (U.N.O.).
   - H. TOILET PAPER DISPENSERS BELOW GRAB BAR: 24" MIN. AND 42" MAX. FROM BACK WALL, 18" MIN. A.F.F. AND 1½" MIN. FROM BOTTOM OF HORIZONTAL GRAD BAR.
3. ANY NEW OR RELOCATED OPERATING COMPONENTS (SWITCHES, FIRE PULLS, THERMOSTATS, SECURITY ALARMS, FIRE EXTINGUISHERS, EMPLOYEE TIME CLOCK, ETC.) LOCATED ON WALLS, MUST BE 48" A.F.F. TO THE HIGHEST OPERATING BUTTON OR UNIT.
4. IF AN AREA OF REFUGE IS PROVIDED AT AN EXIT IT SHALL BE IDENTIFIED BY A SIGN WHICH STATES "AREA OF REFUGE" AND DISPLAYS THE INTERNATIONAL SYMBOL OF ACCESSIBILITY. THE SIGN SHALL BE ILLUMINATED WHEN EXIT SIGN ILLUMINATION IS REQUIRED. PROVIDE A TWO-WAY COMMUNICATION SYSTEM BETWEEN THE AREA OF REFUGE AND A CENTRAL POINT APPROVED BY THE BUILDING INSPECTOR.
5. WHERE LOCKERS ARE PROVIDED IN ACCESSIBLE SPACES, AT LEAST FIVE PERCENT, BUT NOT LESS THAN ONE, OF EACH TYPE SHALL BE ACCESSIBLE.
6. BENCHES SHALL HAVE SEATS 42" MINIMUM IN LENGTH, AND 20" MINIMUM AND 24" MAXIMUM IN DEPTH. THE TOP OF THE BENCH SEAT SHALL BE 17" MINIMUM AND 19" MAXIMUM ABOVE THE FLOOR, MEASURED TO THE TOP OF THE SEAT. WHERE PROVIDED IN WET LOCATIONS THE SURFACE OF THE SEAT SHALL BE SLIP RESISTANT AND SHALL NOT ACCUMULATE WATER. ALLOWABLE STRESSES SHALL NOT BE EXCEEDED FOR MATERIALS USED WHERE A VERTICAL OR HORIZONTAL FORCE OF 250 POUNDS IS APPLIED AT ANY POINT ON THE SEAT, FASTENER MOUNTING DEVICE, OR SUPPORTING STRUCTURE.
7. WHERE COAT HOOKS ARE PROVIDED IN LOCKER ROOMS, AT LEAST ONE OF EACH TYPE SHALL BE ACCESSIBLE AND SHALL BE PROVIDED IN ACCESSIBLE TOILET ROOMS WITHOUT TOILET COMPARTMENTS, ACCESSIBLE TOILET COMPARTMENTS AND ACCESSIBLE DRESSING, FITTING AND LOCKER ROOMS. ACCESSIBLE COAT HOOKS PROVIDED WITHIN THE ROOM SHALL ACCOMMODATE A FORWARD OR SIDE UNOBSTRUCTED REACH, THE HIGH REACH SHALL BE 48" MAXIMUM AND THE LOW REACH SHALL BE 15" MINIMUM ABOVE THE FLOOR.

TOILET ROOM ACCESSORIES SCHEDULE

SYM.	DESCRIPTION	MANUF.	MODEL #	MTD. HGT.	REMARKS
1	MIRROR	AMERICAN SPECIALTIES, INC.	0620	40" A.F.F. TO REFLECTIVE SURFACE	24"Wx36"H
2	PAPER TOWEL HOLDER OR ELEC. HAND DRYER RECESSED				
3	TOILET PAPER HOLDER	AMERICAN SPECIALTIES, INC.	7305-S	SEE ELEVATIONS (THIS SHEET)	SURFACE MOUNTED
4	SOAP DISPENSER	BOBRICK	B-2111	44" A.F.F. TO PUSH BUTTON	SURFACE MOUNT
5	H/C CLOTHES HOOK AND BUMPER	BOBRICK	B-212	48" A.F.F. TO HOOK FOR H/C	SURFACE MOUNTED
6	42" GRAB BAR	BOBRICK	B-5086.99X42	33"-36" A.F.F. TO TOP OF BAR	SURFACE MOUNTED SNAP FLANGE
7	36" GRAB BAR	BOBRICK	B-5086.99X36	33"-36" A.F.F. TO TOP OF BAR	SURFACE MOUNTED SNAP FLANGE
8	18" VERTICAL GRAB BAR	BOBRICK	B-5086.99X18	SEE ELEVATIONS (THIS SHEET)	SURFACE MOUNTED SNAP FLANGE
9	ADA MEN'S SIGNAGE	ROCKWOOD	SERIES BFM: BFM687	60" A.F.F. TO CENTER OF SIGN	SURFACE MOUNTED
10	ADA WOMEN'S SIGNAGE	ROCKWOOD	SERIES BFM: BFM688	60" A.F.F. TO CENTER OF SIGN	SURFACE MOUNTED
11	ADA UNISEX SIGNAGE	ROCKWOOD	SERIES BFM: BFM689	60" A.F.F. TO CENTER OF SIGN	SURFACE MOUNTED
12	FREE-STANDING OPEN TRASH CAN	BOBRICK	B-2280	--	--

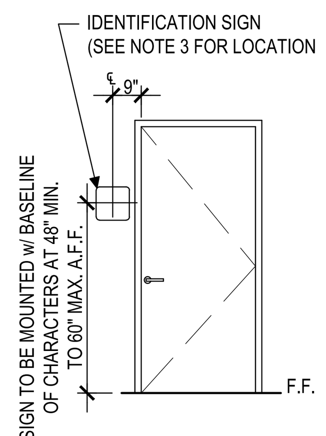

8 / A402 IDENTIFICATION SIGN ELEVATION
SCALE: 1/4"=1'-0"

ADA BRAILLE IDENTIFICATION SIGNS

PROVIDE TACTILE SIGNS FOR ALL EGRESS EXITS & HANDICAP ACCESSIBLE RESTROOMS.

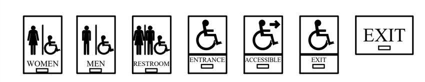

¼" THICK SIGNS W/ GRADE 2 BRAILLE (TYP)

1. CHARACTERS AND IDENTIFICATION SYMBOLS ARE TO BE DISTINCTLY DIFFERENT FROM THE BACKGROUND IN COLOR AND CONTRAST.
2. LETTERS AND NUMBERS ON SIGNS SHALL BE RAISED 1/32" MIN., SHALL BE A MIN. OF 5/8" HIGH AND MAX. OF 2" HIGH. CHARACTERS SHALL BE UPPERCASE AND SANS-SERIF ACCOMPANIED BY GRADE 2 BRAILLE.
3. PROVIDE IDENTIFICATION SIGN ON WALL TO LATCH SIDE OF DOOR. WHERE SIGNS ARE PROVIDED AT DOUBLE DOORS, THE SIGN SHALL BE TO THE RIGHT OF THE RIGHT HAND DOOR. WHERE NO WALL SPACE IS AVAILABLE SIGNS SHALL BE ON THE NEAREST ADJACENT WALL.

HANDICAP CLEARANCE LEGEND

MARK	DESCRIPTION
H	DENOTES 30"x48" CLEAR FLOOR SPACE
K	DENOTES 60" DIA. CLEAR FLOOR SPACE
J	DENOTES 56"x60" CLEAR FLOOR SPACE

NOTE:
1. FOR "A" THROUGH "G" REFER TO MANEUVERING CLEARANCE AT MANUAL SWINGING DOORS SCHEDULE.

TOILET/RESTROOM NOTES

1. PROVIDE ANY REQUIRED WOOD BLOCKING FOR ALL TOILET ACCESSORIES, HANDICAP HARDWARE, MECHANICAL, ELECTRICAL, PLUMBING ITEMS AND MILLWORK, WHERE REQUIRED.
2. COORDINATE w/ OWNER ON PAPER TOWEL, TOILET PAPER AND SOAP DISPENSERS, BEFORE ORDERING. OWNER MAY PROVIDE.

MANEUVERING CLEARANCE AT MANUAL SWINGING DOORS
ICC-A117.1-2009 FIG. 404.2.3.2

INDICATES DIRECTION OF APPROACH

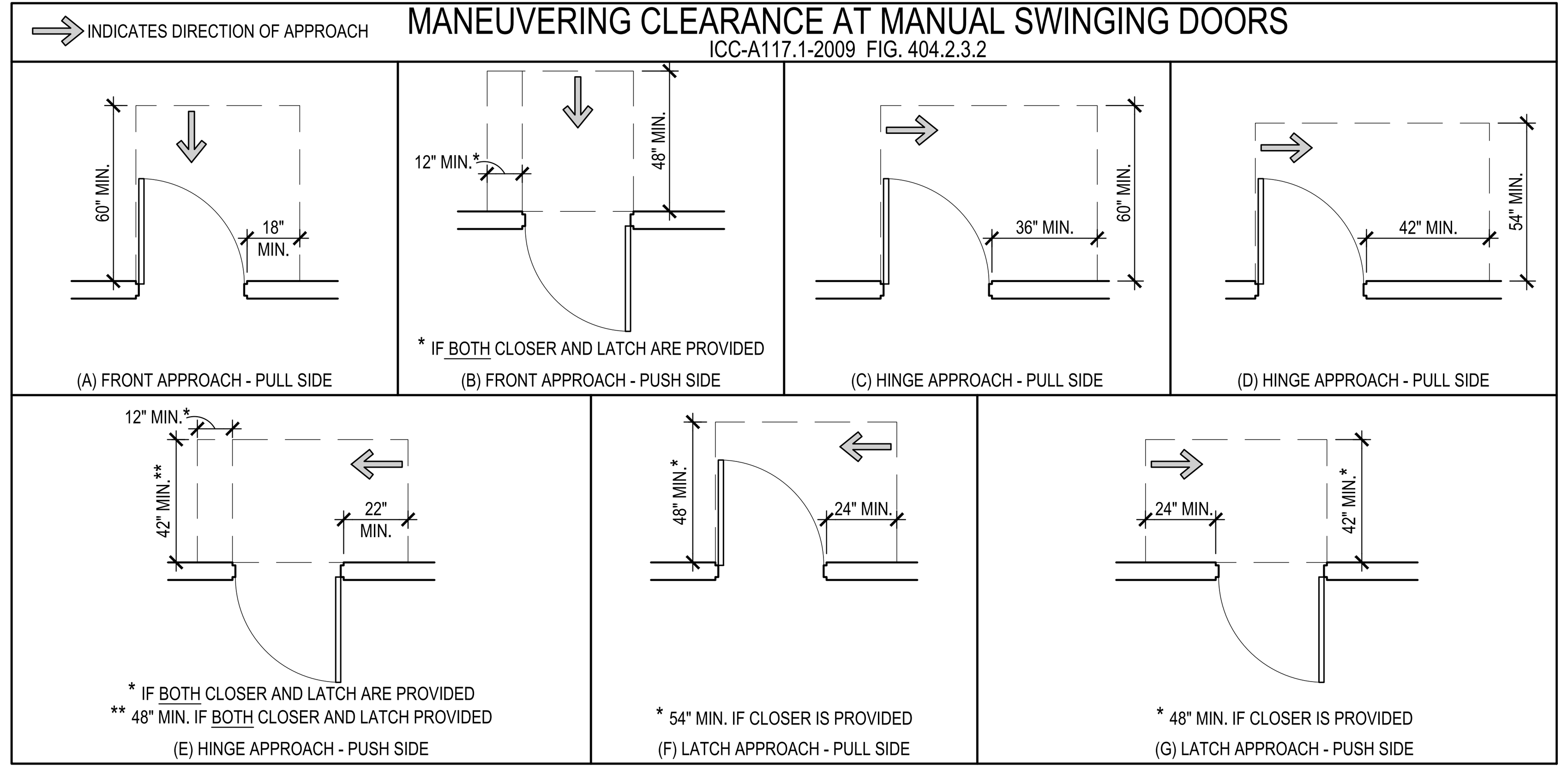

(A) FRONT APPROACH - PULL SIDE

* IF BOTH CLOSER AND LATCH ARE PROVIDED
(B) FRONT APPROACH - PUSH SIDE

(C) HINGE APPROACH - PULL SIDE

(D) HINGE APPROACH - PULL SIDE

* IF BOTH CLOSER AND LATCH ARE PROVIDED
** 48" MIN. IF BOTH CLOSER AND LATCH PROVIDED
(E) HINGE APPROACH - PUSH SIDE

* 54" MIN. IF CLOSER IS PROVIDED
(F) LATCH APPROACH - PULL SIDE

* 48" MIN. IF CLOSER IS PROVIDED
(G) LATCH APPROACH - PUSH SIDE

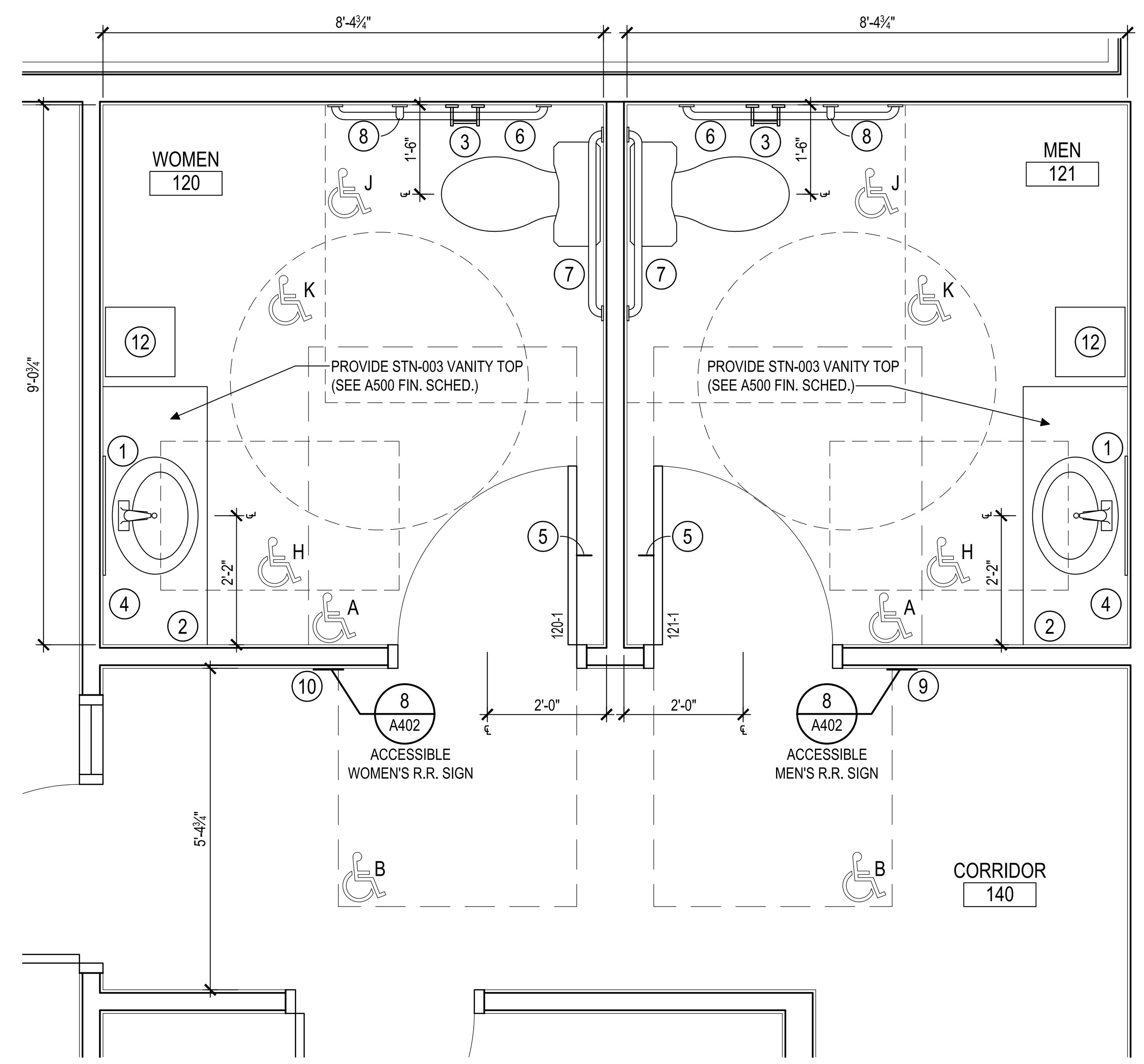

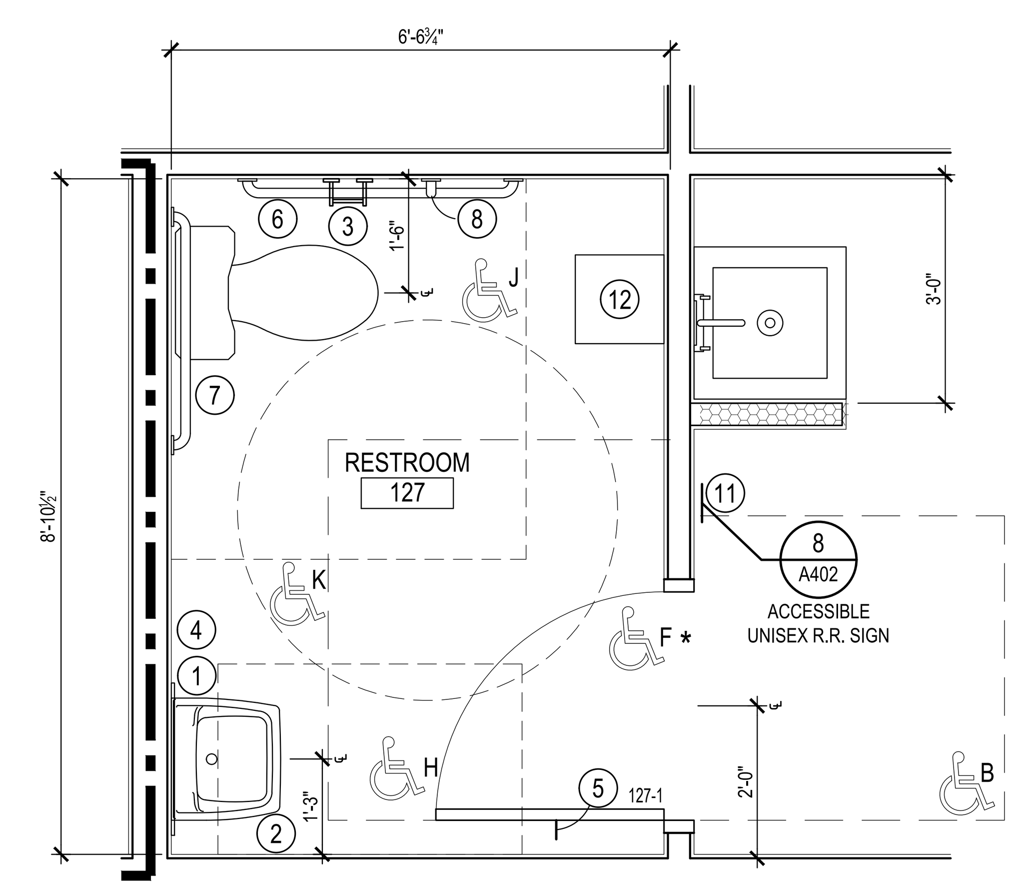

A / A402 ENLARGED RESTROOM PLANS
SCALE: 1/2"=1'-0"

NOTES:
1. REFER TO FLOOR PLAN (1/A101) FOR INDICATED WALL, WINDOW & DOOR TYPES.
2. SEE ELEVATIONS FOR CLEARANCES & MOUNTING HEIGHTS.
3. DIMENSIONS ARE SHOWN TO FINISHED SURFACES UNLESS OTHERWISE NOTED.
4. SEE FIXTURE SCHEDULE ON PLUMBING DRAWINGS.

HEX 9 ARCHITECTS
ARCHITECTURE PLANNING
An LLC Company
5427 Woodside Drive
Gap, PA 17527
(717) 442-9034
(717) 283-0097 fx
JOSEPH TURNOWCHYK, AIA, NCARB

STATE OF NEW YORK REGISTRATION # 036357-1

ALL CONTRACTORS ARE TO VERIFY ALL DIMENSIONS, FIELD CONDITIONS AND THE WORK OF OTHER TRADES BEFORE PROCEEDING WITH THEIR WORK.

This drawing is the exclusive property of HEX 9 ARCHITECTS and may not be reproduced in any form without written authorization from HEX 9 ARCHITECTS. Unauthorized reproduction or use of any or all parts of this drawing will constitute a violation of U.S. copyright laws.

COPYRIGHT © 2018 HEX 9 ARCHITECTS ALL RIGHTS RESERVED

REVISIONS

NUMBER	DATE	REVISED BY

DATE	FEBRUARY 6, 2018
DRAWN BY	CMT
PROJECT NUMBER	16114

NEW FACILITY FOR:
SLEEP INN & SUITES
CHOICE PROPERTY I.D. # NY701
635 ELMIRA ROAD
ITHACA, NEW YORK 14850

HANDICAP ACCESSIBLE DETAILS & NOTES

A402
DRAWING NUMBER

FINAL DRAWINGS

I:\2016\16114 SLEEP INN - ITHACA, NY\PRODUCTION\A402 HANDICAP ACC DETAILS.DWG 05-31-18 9:43 AM PRINTED BY: USER06

Design No. P522
March 15, 2006

Unrestrained Assembly Rating — 1 Hr

Finish Rating — 25 Min (See Items 3 or 3A)

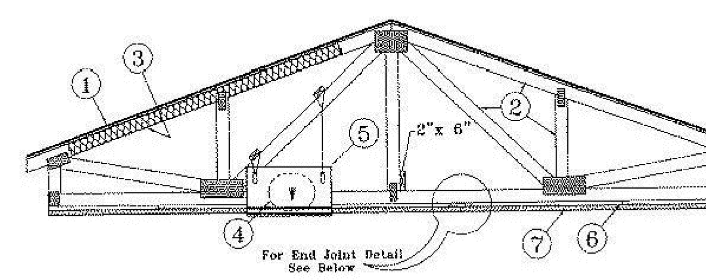

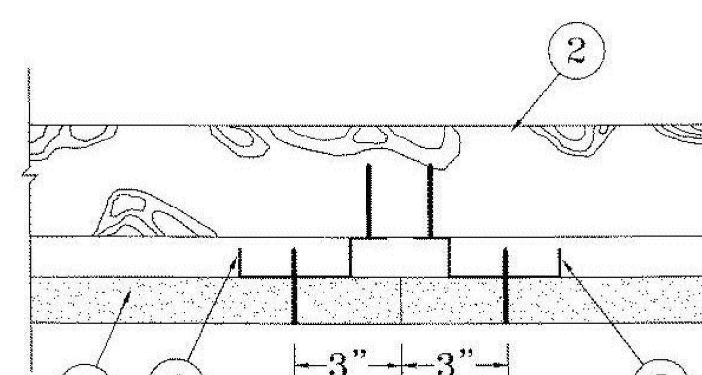

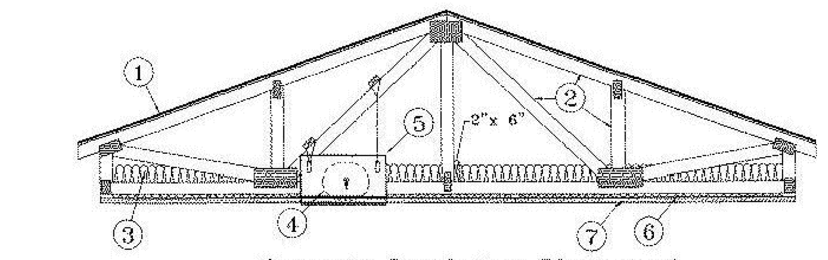

Alternate Insulation Placement

1. **Roofing System*** — Any UL Class A, B or C Roofing System (TGFU) or Prepared Roof Covering (TFWZ) acceptable for use over nom 15/32 in. thick wood structural panels, min. grade "C-D" or "Sheathing". Nom 15/32 in. thick wood structural panels secured to trusses with No. 6d ringed shank nails spaced 12 in. OC along each truss. Staples having equal or greater withdrawal and lateral resistance strength may be substituted for the 6d nails. Construction adhesive may be used with either the nails or staples.
2. **Trusses** — Pitched or parallel chord wood trusses, spaced a max of 24 in. OC, fabricated from nom 2 by 4 lumber, with lumber oriented vertically or horizontally. Truss members secured together with min. 0.0356 in. thick galv steel plates. Plates have 5/16 in. long teeth projecting perpendicular to the plane of the plate. The teeth are in pairs facing each other (made by the same punch), forming a split tooth type plate. Each tooth has a chisel point on its outside edge. These points are diagonally opposite each other for each pair. The top half of each tooth has a twist for stiffness. The pairs are repeated on approximately 7/8 in. centers with four rows of teeth per inch of plate width. Where the truss intersects with the interior face of the exterior walls, the min truss depth shall be 5-1/4 in. with a min roof slope of 3/12 and a min. area in the plane of the truss of 21 sq.ft. Where the truss intersects with the interior face of the exterior walls, the min truss depth may be reduced to 3 in. if the batts and blankets (Item 3) are used as shown in the above illustration (Alternate Insulation Placement) and are firmly packed against the intersection of the bottom chords and the plywood sheathing.
3. **Batts and Blankets*** — (Optional) - Required when Item 6B is used — Glass fiber insulation, secured to the wood structural panels with staples spaced 12 in. OC or to the trusses with 0.090 in. diam galv steel wires spaced 12 in. OC. Any glass fiber insulation bearing the UL Classification Marking as to Surface Burning Characteristics and/or Fire Resistance, having a min density of 0.5 pcf. As an option, the insulation may be fitted in the concealed space, draped over the resilient channel/gypsum board ceiling membrane when resilient channels and gypsum board attachment is modified as specified in Items 6 and 7. When **Steel Framing Members** (Item 6B) are used, max 3-1/2 in. thick insulation shall be draped over the furring channels (Item 6Ba) and gypsum board ceiling membrane, and friction-fitted between trusses and Steel Framing Members (Item 6Bd). The finished rating has only been determined when the insulation is secured to the decking.
3A. **Fiber, Sprayed*** — As an alternate to Item 3 (not evaluated for use with Item 6B) — Any thickness of spray-applied cellulose insulation material, having a min density of 0.5 pcf, applied within the concealed space, over the resilient channel/gypsum board ceiling membrane when resilient channels and gypsum board attachment is modified as specified in Items 6 and 7. The finished rating when Fiber, Sprayed is used has not been determined. The fiber is applied with water within the concealed space, over the resilient channel/gypsum board ceiling membrane, in accordance with the application instructions supplied with the product. Alternate application method: The fiber is applied with U.S. Greenfiber LLC Type AD100 hot melt adhesive at a nominal ratio of one part adhesive to 6.6 parts fiber in accordance with the application instructions supplied with the product. Alternate application method: The fiber is applied without water or adhesive in accordance with the application instructions supplied with the product.

U S GREENFIBER L L C — Cocoon2 Stabilized or Cocoon-FRM (Fire Rated Material).

4. **Air Duct*** — Any UL Class 0 or Class 1 flexible air duct installed in accordance with the instructions provided by the damper manufacturer.
5. **Ceiling Damper*** — Max nom area, 324 sq in. Max square size, 18 in. by 18 in. rectangular sizes not to exceed 324 sq in. with a max width of 18 in. Max damper height is 14 in. Installed in accordance with manufacturers installation instructions provided with the damper. Max damper openings not to exceed 162 sq in. per 100 sq ft of ceiling area.

C&S AIR PRODUCTS — Model RD-521

POTTORFF — Model CFD-521

5A. **Alternate Ceiling Damper*** — Max nom area, 196 sq in. Max square size, 14 in. by 14 in. Rectangular sizes not to exceed 196 sq in. with a max width of 24 in. Max overall damper height is 7 in. Installed in accordance with the manufacturers installation instructions provided with the damper. Max damper openings not to exceed 196 sq in. per 100 sq ft of ceiling area.

C&S AIR PRODUCTS — Model RD-521-BT

POTTORFF — Model CFD-521-BT.

6. **Furring Channels** — Resilient channels, nom. 1/2 in. deep by 2-3/8 in. wide at the base and 1-3/8 in. wide at the face, formed from 0.020 in. thick galv steel. Installed perpendicular to the trusses (Item 2), spaced a max of 16 in. OC when no insulation (Item 3 or 3A) is fitted in the concealed spaced, or a max of 12 in. OC when insulation (Item 3 or 3A) is fitted in the concealed space, draped over the resilient channel/gypsum board ceiling membrane. Two courses of resilient channel positioned 6 in. OC at wallboard butt-joints (3 in. from each end of wallboard). Channels oriented opposite at wallboard butt-joints. Channel splices overlapped 4 in. beneath wood trusses. Channels secured to each truss with 1-1/4 in. long Type S screws.

7. **Gypsum Board*** — One layer of nom 5/8 in. thick by 48 in. wide boards, installed with long dimension parallel to trusses. Attached to the resilient channels using 1 in. long Type S bugle-head screws. Screws spaced a max of 12 in. OC along butted end-joints and in the field when no insulation (Item 3 or 3A) is fitted in the concealed spaced, or a max of 8 in. OC along butted end-joints and in the field when insulation (Item 3 or 3A) is fitted in the concealed space, draped over the resilient channel/gypsum board ceiling membrane.

When **Steel Framing Members*** (Item 6A) are used, sheets installed with long dimension perpendicular to furring channels and side joints of sheet located beneath trusses. Gypsum board screws are driven through channel spaced 12 in. OC in the field when no insulation (Item 3 or 3A) is fitted in the concealed space, or 8 in. OC in the field when insulation (Item 3 or 3A) is fitted in the concealed space, draped over the furring channel/gypsum board ceiling membrane. Gypsum board butt joints shall be staggered min. 2 ft. within the assembly, and occur between the main furring channels. At the gypsum board butt joints, each end of the gypsum board shall be supported by a single length of furring channel equal to the width of the wallboard plus 6 in. on each end. The furring channels shall be spaced approximately 3-1/2 in. OC, and be attached to the trusses with one RSIC-1 clip at each end of the channel. Screw spacing along the butt joint to attach the gypsum board to the furring channels shall be 8 in. OC. Second (outer) layer of gypsum board required when furring channels (Item 6A, a) are spaced 24 in. OC and insulation is fitted in the concealed space, draped over the furring channel/gypsum board ceiling membrane. Outer layer of gypsum board attached to the furring channels using 1-5/8 in. long Type S bugle-head screws spaced 8 in. OC at butted joints and 12 in. OC in the field. Butted end joints of outer layer to be offset a minimum of 8 in. from base layer end joints. Butted side joints of outer layer to be offset minimum 18 in. from butted side joints of base layer.

When **Steel Framing Members** (Item 6B) are used, two layers of nom 5/8 in. thick, 4 ft wide gypsum board are installed with long dimensions perpendicular to furring channels (Item 6Ba). Base layer attached to the furring channels using 1 in. long Type S bugle head steel screws spaced 8 in. OC along butted end joints and 12 in. OC in the field of the board. Butted end joints centered on the continuous furring channels. Butted base layer end joints to be offset a min of 16 in. in adjacent courses. Outer layer attached to the furring channels using 1-5/8 in. long Type S bugle head steel screws spaced 8 in. OC at butted end joints and 12 in. OC in the field. Butted end joints centered on the continuous furring channels and offset a min of 16 in. from butted end joints of base layer. Butted side joints of outer layer to be offset min 16 in. from butted side joints of base layer.

CANADIAN GYPSUM COMPANY — Types C, IP-X2, IPC-AR.

UNITED STATES GYPSUM CO — Types C, IP-X2, IPC-AR.

USG MEXICO S A DE C V — Types C, IP-X2, IPC-AR.

8. **Finishing System** — (Not Shown) — Vinyl, dry or premixed joint compound, applied in two coats to joints and screw-heads; paper tape, 2 in. wide, embedded in first layer of compound over all joints. As an alternate, nom 3/32 in. thick veneer plaster may be applied to the entire surface of gypsum board. **Alternate Ceiling Membrane** — Not Shown.
9. **Steel Framing Members** —
a. **Main runners** — Installed perpendicular to trusses — Nom 10 or 12 ft long, 15/16 in. or 1-1/2 in. wide face, spaced 4 ft OC. Main runners hung a min of 2 in. from bottom chord of trusses with 12 SWG galv steel wire. Wires located a max of 48 in. OC.
b. **Cross tees or channels** — Nom 4 ft long, 15/16 in. or 1-1/2 in. wide face or cross channels, nom 4 ft long, 1-1/2 wide face, installed perpendicular to the main runners, spaced 16 in. OC. Additional cross tees or channels used at 8 in. from each side of butted gypsum board end joints. The cross tees or channels may be riveted or screw-attached to the wall angle or channel to facilitate the ceiling installation.
c. **Wall angles or channels** — Used to support steel framing member ends and for screw-attachment of the gypsum wallboard — Min 0.016 in. thick painted or galvanized steel angle with 1 in. legs or min. 0.016 in. thick painted or galvanized steel channel with a 1 by 1-1/2 by 1 in. profile, attached to walls at perimeter of ceiling with fasteners 16 in. OC.

4 / A403 **1-HR. RATED ROOF/CEILING ASSMEBLY - UL #P522**
SCALE: N.T.S.

ONLINE CERTIFICATIONS DIRECTORY

Design No. L502
BXUV.L502
Fire-resistance Ratings - ANSI/UL 263

Page Bottom

Design/System/Construction/Assembly Usage Disclaimer

- Authorities Having Jurisdiction should be consulted in all cases as to the particular requirements covering the installation and use of UL Certified products, equipment, system, devices, and materials.
- Authorities Having Jurisdiction should be consulted before construction.
- Fire resistance assemblies and products are developed by the design submitter and have been investigated by UL for compliance with applicable requirements. The published information cannot always address every construction nuance encountered in the field.
- When field issues arise, it is recommended the first contact for assistance be the technical service staff provided by the product manufacturer noted for the design. Users of fire resistance assemblies are advised to consult the general Guide Information for each product category and each group of assemblies. The Guide Information includes specifics concerning alternate materials and alternate methods of construction.
- Only products which bear UL's Mark are considered Certified.

BXUV - Fire Resistance Ratings - ANSI/UL 263

BXUV7 - Fire Resistance Ratings - CAN/ULC-S101 Certified for Canada

See General Information for Fire-resistance Ratings - ANSI/UL 263

See General Information for Fire Resistance Ratings - CAN/ULC-S101 Certified for Canada

Design No. L502

December 30, 2016

Unrestrained Assembly Rating — 1 Hr

Finish Rating — 22 Min. or (16 Min. See Item 7D)

This design was evaluated using a load design method other than the Limit States Design Method (e.g., Working Stress Design Method). For jurisdictions employing the Limit States Design Method, such as Canada, a load restriction factor shall be used — See Guide BXUV or BXUV7

*** Indicates such products shall bear the UL or cUL Certification Mark for jurisdictions employing the UL or cUL Certification (such as Canada), respectively.**

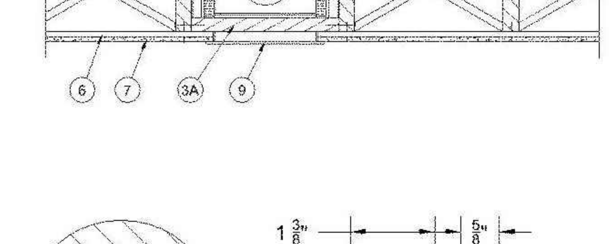

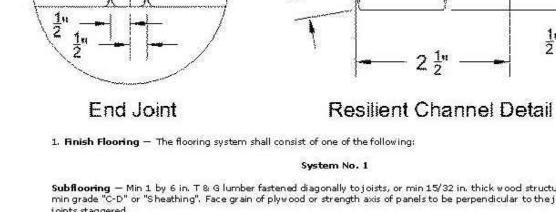

End Joint   Resilient Channel Detail

1. **Finish Flooring** — The flooring system shall consist of one of the following:

System No. 1

Subflooring — Min 1 by 6 in. T & G lumber fastened diagonally to joists, or min 15/32 in. thick wood structural panels, min grade "C-D" or "Sheathing". Face grain of plywood or strength axis of panels to be perpendicular to the joists with joints staggered.

Subflooring (Alternate) — **Structural Cement-Fiber Units*** — Nominal 19 mm (3/4 in.) thick tongue and groove structural cement-fiber units. Long dimension of panels to be perpendicular to joists with end joints staggered. Panels fastened to the joists with #10 self-drilling, self-tapping cement board screws 1-3/4 in. long. Screws shall be spaced 6 in. OC along the perimeter of each sheet and 12 in. OC in the field of each sheet. Screws shall be spaced 1/2 in. from end joints and 1 in. from side joints.

ECTEK INTERNATIONAL INC — Armoroc Panel

Vapor Barrier — **(Optional)** — Nom 0.010 in. thick commercial rosin-sized building paper.

Finish Flooring — Min 1 by 4 in. T & G lumber fastened diagonally to joists, or min 19/32 in. wood structural panels, min grade "Underlayment" or "Single Floor". Face grain of plywood or strength axis of panels to be perpendicular to joists with joints staggered.

System No. 2

Subflooring — Min 1 by 6 in. T & G lumber fastened diagonally to joists, or min 15/32 in. thick wood structural panels, min grade "C-D" or "Sheathing". Face grain of plywood or strength axis of panels to be perpendicular to the joists with joints staggered.

Vapor Barrier — **(Optional)** — Nom 0.010 in. thick commercial rosin-sized building paper.

Finish Flooring — **Floor Topping Mixture*** — Min 1-1/2 in. thickness of floor topping mixture having a min compressive strength of 1000 psi and a cast density of 100 plus or minus 5 pcf. Foam concentrate mixed 40:1 by volume with water and expanded at 100 psi through nozzle. Mixture shall consist of 1.4 cu feet of preformed foam concentrate to 94 lbs Type I Portland cement, 300 lbs of sand with 5-1/2 gal of water.

ELASTIZELL CORP OF AMERICA — Type FF

Fiberglass Mesh Reinforcement — (Optional) — Coated non-woven glass fiber mesh grid loose laid over floor mat material.

2. **Wood Joists** — Min 2 by 10, spaced 16 in. OC and effectively fireblocked in accordance with local codes.

3. **Cross Bridging** — Min 1 by 3 in. or min 2 by 10 solid blocking.

3A. **Horizontal Bridging** — Used in lieu of Item 3 in same joist bay as ceiling damper (Item 4), when ceiling damper is employed. Wood 2 by 4 in. secured between joists with nails.

4. **Ceiling Damper*** — **(Optional)** — Max nom area shall be 198 sq in. Max rectangular size shall be 12 in. wide by 16-1/2 in. long. Max height of damper shall be 8-3/4 in. Aggregate damper openings shall not exceed 99 sq in. per 100 sq ft of ceiling area. Damper installed in accordance with the manufacturers installation instructions provided with the damper. A steel grille (Item 9) shall be installed in accordance with installation instructions.

AIR BALANCE INC — Type 299 (See Item 7D)

AIR KING VENTILATION PRODUCTS — Series AS, Series AK

AIR MANAGEMENT INC — Models AMI-50-CD-WG-B, AMI-50-CD-WG-B/VC

CENTRAL VENTILATION SYSTEMS CO L L C — Models C-S/R-HC(-A), C-RD-HC(-A); Models CD-S/R-HC, CD-RD-HC

GREENHECK FAN CORP — Model CRD-1WJ

METAL-FAB INC — Models MSCDHC, MRCDHC

METAL INDUSTRIES INC — Models CD-S/R-HC, CD-S/R-HC-A, CD-RD-HC, CD-RD-HC-A

METROPOLITAN AIR TECHNOLOGY — Model C-S/R-HC

NCA MFG INC — Models CD-S/R-HC, CD-S/R-HC-A, CD-RD-HC, CD-RD-HC-A

PRICE INDUSTRIES LTD

RUSKIN COMPANY — Model CFD7

UNITED ENERTECH CORP — Models C-S/R-HC(-A), C-RD-HC(-A)

5. **Batts and Blankets*** — **(Optional, Not Shown)** — For use with **Steel Framing Members*** (Items 6C and 6G) and **Gypsum Board*** (Items 7A and 7B). Any thickness mineral wool or glass fiber insulation bearing the UL Classification Marking for Surface Burning Characteristics, having a flame spread index of 25 or less and a smoke developed index of 50 or less. Insulation fitted in the concealed space, draped over the steel framing members/gypsum board ceiling membrane.

5A. **Batts and Blankets*** — For Use With Items 6G and 7C - Glass fiber insulation draped over the resilient channel/gypsum panel ceiling membrane. Max. 3-1/2 in. thickness of glass fiber insulation bearing the UL Classification Marking as to Surface Burning Characteristics and/or Fire Resistance having a min. density of 0.5 pcf.

5B. **Batts and Blankets*** — For use with **Steel Framing Members*** (Item 6K) and **Gypsum Board*** (Item 7E) - min. 3-1/2 in. thick, min. density 0.9 lb/ft³ unfaced fiberglass batt insulation bearing the UL Classification Marking for Surface Burning Characteristics, having a flame spread value of 25 or less and a smoke spread value of 50 or less. Insulation fitted in the concealed space, draped over steel framing members/gypsum board ceiling membrane and light fixture protection.

6. **Resilient Channels** — Resilient channels, formed from No. 25 MSG galv steel and shaped as shown, spaced 24 in. OC perpendicular to joist. Channels overlapped 4 in. at splices and secured to each joist with one 6d common nail. Min end clearance of channels to wall to be 1/2 in. Additional resilient channels positioned so as to coincide with end joints of gypsum board (Item 7). Additional channels shall extend min 6 in. beyond each side edge of board. As an alternate to the resilient channels, **Steel Framing Members*** (Items 6A, 6B, 6C or 6D) may be used.

6A. **Steel Framing Members*** — **(Not Shown)** — As an alternate to Item 6, main runners nom 12 ft long spaced 48 in. OC. Cross tees nom 4 ft long installed perpendicular to main runners and spaced 16 in. OC. Additional cross tees located 8 in. from and on each side of gypsum board end joints. Main runners suspended by min 12 SWG galv steel hanger wires spaced 48 in. OC. Hanger wires to be located adjacent to main runner/cross tee intersections. Hanger wires wrapped and twist-tied on 16d nails driven into the side of joists at least 5 in. above the joist bottom face.

CHICAGO METALLIC CORP — Types 650, 650C, 670, 670C

end clearance of channels to wall to be 1/2 in. Additional resilient channels positioned so as to coincide with end joints of gypsum board (Item 7B or 7C).

6H. **Steel Framing Members*** — (Not Shown) — As an alternate to items 6, 6A, 6B, 6C and 6D, furring channels and Steel Framing Members as described below.

a. **Furring Channels** — Formed of No. 25 MSG galv steel, 2-3/8 in. wide by 7/8 in deep, spaced 24 in OC, perpendicular to joists. Channels secured to joists as described in Item b. Ends of adjoining channels overlapped 6 in. and tied together with double strand of No. 18 SWG galv steel wire near each end of overlap.

b. **Steel Framing Members*** — Used to attach furring channels (Item a) to the wood joists (Item 2). Clips spaced 48 in. OC., and secured to alternating joists with No. 8 x 2-1/2 in. coarse drywall screw through the center grommet. Furring channels are friction fitted into clips. Adjoining channels are overlapped as described in Item a. As an alternate, ends of adjoining channels may be overlapped 6 in. and secured together with two self-tapping No. 6 framing screws, min 7/16 in. long at the midpoint of the overlap, with one screw on each flange of the channel. Additional clips required to hold furring channel that supports the gypsum board butt joints, as described in Item 7.

PLITEQ INC — Type Genie Clip

6I. **Steel Framing Members*** — (Not Shown) — As an alternate to Items 6, 6A, 6B, 6C and 6D, furring channels and Steel Framing Members as described below.

a. **Furring Channels** — Formed of No. 25 MSG galv steel, 2-5/8 in. wide by 7/8 in deep, spaced 24 in OC, perpendicular to joists. Channels secured to joists as described in Item b.

b. **Steel Framing Members*** — Used to attach furring channels (Item a) to the wood joists (Item 2). Clips spaced at 16 in. OC and secured to the bottom of the joists with one No. 10 x 2-1/2 Coarse Drywall Screw through the center hole. Furring channels are then friction fitted into clips. Ends of channels are overlapped 6" and screwed with four No. 8 x 1/2 Self Drilling screws (2 per side 1 in. and 4 in. from overlap edge). Additional clips are required to hold the Gypsum Butt joints and side joints as described in Item 7.

STUDCO BUILDING SYSTEMS — RESILMOUNT Sound Isolation Clips - Type A237 or A237R

6J. **Steel Framing Members*** — (Not Shown) — As an alternate to Items 6 through 6I - Main runners nom 12 ft long, spaced 72 in. OC. Main runners suspended by min 12 SWG galv steel hanger wires spaced 48 in. OC. Cross tees, nom 6 ft long, installed perpendicular to main runners and spaced 24 in. OC. Additional 6 ft long cross tees required at each gypsum board end joint with butted gypsum board end joints centered between cross tees spaced 8 in. OC. The main runners and cross tees may be riveted or screw attached to the wall angle or channel to facilitate the ceiling installation.

USG INTERIORS LLC — Type DGL or RX

6K. **Steel Framing Members*** — (Not Shown) — As an alternate to Items 6 through 6J - Main runners nom 12 ft long, spaced 48 in. OC. Cross tees, nom 4 ft. long, installed perpendicular to main runners and spaced 24 in. OC. Additional 4 ft. long cross tees required at 6 in. from each side of butted gypsum board end joints. When **Batts and Blankets*** (Item 5B) are used, cross tees spaced 16 in. OC with additional cross tees 8 in. away from each side of butted gypsum board end joints. The cross tees shall be riveted with 1/8 in. dia. rivets to the wall angle and to the main tee where the cross tee does not align with slot in the main tee. Galvanized steel wall angle with 1-1/2 in. legs attached to walls at perimeter of ceiling with fasteners at 16 in. OC. to support steel framing member ends and for screw-attachment of the gypsum board.

CERTAINTEED CORP — Types DWS12-13-20, DWS4.16-13-20, DWS4-13-20, DWS2-13-20, DWS2.16-13-20 and DWA1.5-1.5

6L. **Framing Members*** — (Not Shown) — As an alternate to Items 6 through 6K. Main runners nom 12 ft long, spaced 72 in. OC. Main runners suspended by min 12 SWG galv steel hanger wires spaced 48 in. OC. Cross tees, nom 6 ft long, installed perpendicular to main runners and spaced 24 in. OC. Additional 6 ft long cross tees required at each gypsum board end joint with butted gypsum board end joints centered between cross tees spaced 8 in. OC. The main runners and cross tees may be riveted or screw attached to the wall angle or channel to facilitate the ceiling installation.

CHICAGO METALLIC CORP — Type 670C

7. **Gypsum Board*** — Nom 1/2 in. thick, 4 ft wide gypsum board. When resilient channels (Item 6) are used, gypsum board installed with long dimension perpendicular to resilient channels and side joints of sheet located between joists. Nom 1 in. long No. 6 Type S bugle head screws are driven through channel spaced 12 in. OC. End joints of gypsum board similarly fastened to additional resilient channels positioned at end joint locations. Screws shall be spaced 1/2 in. from end joints.

When **Steel Framing Members*** (Item 6A, 6B, 6C) are used, nom 1/2 in. thick, 4 ft wide gypsum board installed with long dimension perpendicular to cross tees with side joints centered along main runners and end joints centered along cross tees. Gypsum board secured to cross tees with 1 in. long No. 6 Type S bugle head screws spaced 12 in. OC in the field and 8 in OC along end joints. Adjacent gypsum board sheets held to the end joint furring channel by means of one 1 in. long No. 6 Type S bugle head screw on each side of the end joints. All edge screws located 3/8 to 1/2-in. min distance from edges of gypsum board sheets to main runners with 1 in. long No. 6 Type S bugle head screws spaced 16 in. OC, midway between cross tees. Screws along sides and ends of boards spaced 1/2 in. from board edge. End joints of the sheets shall be staggered with spacing between joints on adjacent boards not less than 4 ft OC.

CERTAINTEED GYPSUM INC — Type C

8. **Finishing System (Not Shown)** — Vinyl, dry or premixed joint compound, applied in two coats to joints and screw-heads. Nom 2 in. wide paper tape embedded in first layer of compound over all joints. As an alternate, nom 3/32 in. thick veneer plaster may be applied to the entire surface of gypsum board.

9. **Grille** — Steel grille installed in accordance with the installation instructions provided with the ceiling damper.

*** Indicates such products shall bear the UL or cUL Certification Mark for jurisdictions employing the UL or cUL Certification (such as Canada), respectively.**

5 / A403 **1-HR. RATED FLOOR/CEILING ASSMEBLY - UL #L502**
SCALE: N.T.S.

Design No. U305
July 30, 2007
Bearing Wall Rating — 1 HR.
Finish Rating — See Items 3, 3A, 3D, 3E and 3F.
STC Rating - 56 (See Item 9)

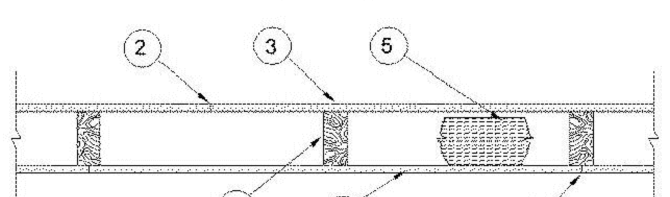

1. **Wood Studs** — Nom 2 by 4 in. spaced 16 in. OC max, effectively firestopped.

2. **Joints and Nail-Heads** — Exposed or covered with fiber tape and joint compound, except where required for specific edge configuration. For tapered, rounded-edge gypsum board, joints covered with joint compound or fiber tape and joint compound. As an alternate, nom 3/32 in. thick gypsum veneer plaster may be applied to the entire surface of Classified veneer baseboard. Joints reinforced. Nailheads exposed or covered with joint compound.

3. **Gypsum Board*** — 5/8 in. thick paper or vinyl surfaced, with beveled, square, or tapered edges, applied either horizontally or vertically. Gypsum panels nailed 7 in. OC with 6d cement coated nails 1-7/8 in. long, 0.0915 in. shank diam and 15/64 in. diam heads. When used in widths other than 48 in., gypsum panels are to be installed horizontally. For an alternate method of attachment of gypsum panels, refer to Item 6 or 6A, Steel Framing Members*.

When Item 6, Steel Framing Members*, is used, gypsum panels attached to furring channels with 1 in. long Type S bugle-head steel screws spaced 12 in. OC.

When Item 6A, Steel Framing Members*, is used, two layers of gypsum panels attached to furring channels. Base layer attached to furring channels with 1 in. long Type S bugle-head steel screws spaced 12 in. OC. Face layer attached to furring channels with 1-5/8 in. long Type S bugle-head steel screws spaced 12 in. OC. All joints in face layers staggered with joints in base layers. One layer of gypsum board attached to opposite side of wood stud without furring channels as described in Item 3.

When Item 7, resilient channels are used, 5/8 in. thick, 4 ft wide gypsum panels applied vertically. Screw attached furring channels with 1 in. long, self-drilling, self-tapping Type S or S-12 steel screws spaced 8 in. OC, vertical joints located midway between studs.

AMERICAN GYPSUM CO — Types AGX-1 (finish rating 23 min.), Type AGX-11 (finish rating 26 min) or Type AG-C

BEIJING NEW BUILDING MATERIALS PUBLIC

LTD CO — Type DBX-1 (finish rating 24 min).

CERTAINTEED GYPSUM WV INC — Type 1, Type SF3 (finish rating 20 min) or FRPC, ProRoc Type C or ProRoc Type X (finish rating 26 min), Type EGRG (finish rating 23 min)

CERTAINTEED GYPSUM CANADA INC — ProRoc Type C, ProRoc Type X or ProRoc Type Abuse-Resistant (finish rating 26 min)

4. **Steel Corner Fasteners** — **(Optional)** — For use at wall corners. Channel shaped, 2 in. long by 1 in. high on the back side with two 1/8 in. wide cleats protruding into the 5/8 in. wide channel, fabricated from 24 gauge galv steel. Fasteners applied only to the end or cut edge (not along tapered edges) of the gypsum board, no greater than 2 in. from corner of gypsum board, max spacing 16 in. OC. Nailed to adjacent stud through tab using one No. 6d cement coated nail per fastener. Corners of wall board shall be nailed to top and bottom plate using No. 6d cement coated nails.

5. **Batts and Blankets*** — (Optional - Required when Item 6A is used) Glass fiber or mineral wool insulation. Placed to completely or partially fill the stud cavities. When Item 6A is used, glass fiber or mineral wool insulation shall be placed to completely fill the stud cavities and shall be secured to the studs 24 in. OC with staples, nails or screws.

CERTAINTEED CORP

GUARDIAN FIBERGLASS INC

JOHNS MANVILLE INTERNATIONAL INC

KNAUF INSULATION GMBH

OWENS CORNING HT INC, DIV OF OWENS

CORNING — Corning Fiberglas Corp.

ROCK WOOL MANUFACTURING CO — Delta Board.

ROXUL INC

THERMAFIBER INC — Type SAFB.

5A. **Fiber, Sprayed*** — (Not shown - Not for use with Item 6A) As an alternate to Batts and Blankets (Item 5) — Spray applied cellulose material. The fiber is applied with water to completely fill the enclosed cavity in accordance with the application instructions supplied with the product. Nominal dry density of 3.0 lb/ft³. Alternate application method: The fiber is applied with U.S. Greenfiber LLC Type AD100 hot melt adhesive at a nominal ratio of one part adhesive to 6.6 parts fiber to completely fill the enclosed cavity in accordance with the application instructions supplied with the product. Nominal dry density of 2.5 lb/ft³.

U S GREENFIBER L L C — Cocoon2 Stabilized or Cocoon-FRM (Fire Rated Material)

5B. **Fiber, Sprayed*** — (Not shown - Not for use with Item 6A) As an alternate to Batts and Blankets (Item 5) and Item 5A - Spray applied cellulose insulation material. The fiber is applied with water to interior surfaces in accordance with the application instructions supplied with the product. Applied to completely fill the enclosed cavity. Minimum dry density of 4.3 pounds per cubic ft.

NU-WOOL CO INC — Cellulose Insulation

5C. **Batts and Blankets*** — Required for use with resilient channels, Item 7, 3 in. thick mineral wool batts, placed to fill interior of wall, attached to the 4 in. face of the studs with staples placed 24 in. OC.

THERMAFIBER INC — Type SAFB

5D. **Glass Fiber Insulation** — (As an alternate to Item 5C) — 3 in. thick glass fiber batts bearing the UL Classification Marking as to Surface Burning and/or Fire Resistance, placed to fill the interior of the wall, attached to the 4 in. face of the studs with staples placed 24 in. OC. See **Batts and Blankets** (BKNV or BZJZ) Categories for names of Classified companies.

5E. **Batts and Blankets*** — (Required for use with Wall and Partition Facings and Accessories, Item 3D) — Glass fiber insulation, nom 3-1/2 in. thick, min. density of 0.80 pcf, with a flame spread of 25 or less and a smoke developed of 50 or less, friction-fitted to completely fill the stud cavities. See Batts and Blankets Category (BKNV) for names of manufacturers.

6. **Steel Framing Members (Optional, Not Shown)*** — Furring channels and Steel Framing Members as described below:

a. **Furring Channels** — Formed of No. 25 MSG galv steel. 2-3/8 in. wide by 7/8 in. deep, spaced 24 in. OC perpendicular to studs. Channels secured to studs as described in Item b. Ends of adjoining channels are overlapped 6 in. and tied together with double strand of No. 18 SWG galv steel wire near each end of overlap. As an alternate, ends of adjoining channels may be overlapped 6 in. and secured together with two self-tapping #6 framing screws, min. 7/16 in. long at the midpoint of the overlap, with one screw on each flange of the channel. Gypsum board attached to furring channels as described in Item 3.

b. **Steel Framing Members*** — Used to attach furring channels (Item 6a) to studs. Clips spaced 48 in. OC. RSIC-1 clips secured to studs with No. 8 x 2-1/2 in. coarse drywall screw through the center grommet. RSIC-V clips secured to studs with No. 8 x 1-1/2 in. coarse drywall screw through the center hole. Furring channels are friction fitted into clips.

PAC INTERNATIONAL INC — Types RSIC-1, RSIC-V.

6A. **Steel Framing Members (Optional, Not Shown)*** — Furring channels and Steel Framing Members on one side of studs as described below:

a. **Furring Channels** — Formed of No. 25 MSG galv steel, spaced 24 in. OC perpendicular to studs. Channels secured to studs as described in Item b. Ends of adjoining channels are overlapped 6 in. and tied together with double strand of No. 18 SWG galv steel wire near each end of overlap. Batts and Blankets placed in stud cavity as described in Item 5. Two layers of gypsum board attached to furring channels as described in Item 3.

b. **Steel Framing Members*** — used to attach furring channels (Item 6Aa) to one side of studs only. Clips spaced 48 in. OC., and secured to studs with two No. 8 x 2-1/2 in. coarse drywall screws, one through the hole at each end of the clip. Furring channels are friction fitted into clips.

KINETICS NOISE CONTROL INC — Type Isomax.

7. **Furring Channel** — Optional - Not Shown - For use on one side of the wall - Resilient channels, 25 MSG galv steel, spaced vertically 24 in. OC, flange portion screw attached to one side of studs with 1-1/4 in. long diamond shaped point, double lead Phillips head steel screws. When resilient channels are used, insulation, Items 5C or 5D is required.

8. **Caulking and Sealants** — (not shown, optional) A bead of acoustical sealant applied around the partition perimeter for sound control.

9. **STC Rating** — The STC Rating of the wall assembly is 56 when it is constructed as described by Items 1 through 6, except:

A. Item 2, above - Nailheads Shall be covered with joint compound.

B. Item 2, above - Joints As described, shall be covered with fiber tape and joint compound.

C. Item 5, above - Batts and Blankets* The cavities formed by the studs shall be friction fit with R-19 unfaced fiberglass insulation batts measuring 6-1/4 in. thick and 15-1/4 in. wide.

D. Item 6, above - Steel Framing Members* Type RSIC-1 clips shall be used to attach gypsum board to studs on either side of the wall assembly.

E. Item 8, above - Caulking and Sealants (not shown) A bead of acoustical sealant shall be applied around the partition perimeter for sound control.

F. Steel Corner Fasteners (Item 4), Fiber, Sprayed (Items 5A and 5B) and Steel Framing Members (Item 6A), not evaluated as alternatives for obtaining STC rating.

10. **Wall and Partition Facings and Accessories*** — (Optional, Not shown) — Nominal 1/2 in. thick, 4 ft wide panels, for optional use as an additional layer on one or both sides of the assembly. Panels attached in accordance with manufacturer's recommendations. When the QR-510 panel is installed between the wood framing and the UL Classified gypsum board, the required UL Classified gypsum board layer(s) is/are to be installed as indicated as to fastener type and spacing, except that the required fastener length shall be increased by a minimum of 1/2 in. Not evaluated or intended as a substitute for the required layer(s) of UL Classified Gypsum Board.

QUIET SOLUTION INC — Type QuietRock QR-510.

11. **Cementitious Backer Units*** — (Optional Item Not Shown - For Use On Face Of 1 Hr Systems With All Standard Items Required) - 1/2 in., 5/8 in., 3/4 in. or 1 in. thick, min. 32 in. wide.- Applied vertically or horizontally with vertical joints centered over studs. Fastened to studs and runners with cement board screws of adequate length to penetrate stud by a minimum of 3/8 in. for steel framing members, and a minimum of 3/4 in. for wood framing members spaced a max of 8 in. OC. When 4 ft. wide boards are used, horizontal joints need not be backed by framing.

NATIONAL GYPSUM CO — Type PermaBase

3 / A403 **1-HR. RATED WALL ASSMEBLY - UL #U305**
SCALE: N.T.S.

Fire Resistance Ratings - ANSI/UL 263

See General Information for Fire Resistance Ratings - ANSI/UL 263

Design No. U469
April 21, 2010

Assembly Rating — 1 HR

Nonbearing Wall

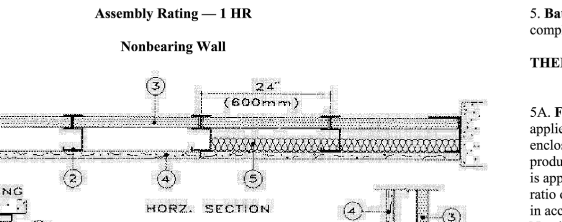

1. **Floor and Ceiling Runners** — "J" - shaped, 2-1/2 in. wide with unequal legs of 1 in. and 2 in., fabricated from 24 MSG galv steel (min 20 MSG steel required when Item 4A is used). Runners attached to structural supports with steel fasteners located not greater than 2 in. from ends and not greater than 24 in. OC.
2. **Steel Studs** — "C-H" shaped studs, 2-1/2 in. wide by 1-1/2 in. deep, fabricated from min 25 MSG galv steel (min 20 MSG steel required when Item 4A is used), spaced 24 in. or 600 mm OC. Vertically restrained walls require studs to be cut 3/8 in. less than floor to ceiling height.
3. **Gypsum Board*** — 1 in. thick gypsum wallboard liner panels, supplied in nominal 24 in. or 600 mm widths. Vertical edges inserted in "H" shaped section of "C-H" studs. Free edge of end panels attached to long leg of "J" runners with 1-5/8 in. long Type S head steel screws spaced not greater than 12 in. OC.

4. **Gypsum Board*** — 5/8 in. thick, 4 ft or 1200 mm wide, applied vertically and attached to studs with 1 in. long Type S steel screws spaced 12 in. OC along the edges and in the field of the boards.

AMERICAN GYPSUM CO — Types AGX-1, AG-C.

4A. **Gypsum Board*** — Not Shown - As an Alternate to Item 4. Nom 5/8 in. thick lead backed gypsum panels with beveled, square or tapered edges, applied vertically. Vertical joints centered over studs and staggered min 1 stud cavity on opposite sides of studs. Wallboard secured to studs with 1-1/4 in. long Type S-12 steel screws spaced 8 in. OC at perimeter and 12 in. OC in the field. Lead batten strips (Item 6) required behind vertical joints

RAY-BAR ENGINEERING CORP — Type RB-LBG

5. **Batts and Blankets*** — (Optional) — Mineral wool batts partially or completely filling stud cavity.

THERMAFIBER INC — Type SAFB.

5A. **Fiber, Sprayed*** — As an alternate to Batts and Blankets (Item 5) — Spray applied cellulose material. The fiber is applied with water to completely fill the enclosed cavity in accordance with the application instructions supplied with the product. Nominal dry density of 3.0 lb/ft³. Alternate application method: The fiber is applied with U.S. Greenfiber LLC Type AD100 hot melt adhesive at a nominal ratio of one part adhesive to 6.6 parts fiber to completely fill the enclosed cavity in accordance with the application instructions supplied with the product. Nominal dry density of 2.5 lb/ft³.

U S GREENFIBER L L C — Cocoon2 Stabilized or Cocoon-FRM (Fire Rated Material)

5B. **Fiber, Sprayed*** — As an alternate to Batts and Blankets (Item 5) and Item 5A - Spray applied cellulose insulation material. The fiber is applied with water to interior surfaces in accordance with the application instructions supplied with the

5C. **Fiber, Sprayed*** — As an alternate to Batts and Blankets (Item 5) - Spray applied cellulose fiber. The fiber is applied with water to completely fill the enclosed cavity in accordance with the application instructions supplied with the product. The minimum dry density shall be 4.30 lbs/ft³.

INTERNATIONAL CELLULOSE CORP — Celbar-RL

6. **Lead Batten Strips** — For Use with Item 4A - (Not Shown) — Lead batten strips required behind vertical joints of lead backed gypsum wallboard (Item 4A) and optional at remaining stud locations. Strips, min 1-1/2 in. wide, max 10 ft long with a max thickness of 0.125 in. Strips placed on the interior face of studs and attached from the exterior face of the stud with two 1 in. long Type S-12 pan head steel screws, one at the top of the strip and one at the bottom of the strip. Lead batten strips to have a purity of 99.9% meeting the Federal specification QQ-L-201f, Grade "C".
6A. **Lead Discs or Tabs** — (Not Shown) - Used in lieu of or in addition to the lead batten strips (Item 6) or optional at other locations - Max 3/4 in. diam by max 0.125 in. thick lead discs compression fitted or adhered over steel screw heads or max 1/2 in. by 1-1/4 in. by max 0.125 in. thick lead tabs placed on gypsum boards (Item 5) underneath screw locations prior to the installation of the screws. Lead discs or tabs to have a purity of 99.9% meeting the Federal specification QQ-L-201f, Grade "C".

*Bearing the UL Classification Mark

2 / A403 **1-HR. RATED SHAFT WALL ASSMEBLY - UL #U469**
SCALE: N.T.S.

Georgia-Pacific | Gypsum Products

Fire and Sound Assembly - Floor/Ceiling Wood-Framed

Base Layer: 5/8" (15.9 mm) ToughRock® Fireguard X™ Products or 5/8" (15.9 mm) DensArmor Plus® Fireguard® gypsum board applied at right angles to 2" x 10" wood joists 24" (610 mm) o.c. with 1-1/4" (32 mm) drywall screws 24" (610 mm) o.c. Face Layer: 5/8" (15.9 mm) ToughRock® Fireguard X™ Products or 5/8" (15.9 mm) DensArmor Plus Fireguard gypsum board applied perpendicular to joists through base layer with 1-7/8" (48 mm) Type W or S screws 12" (305 mm) o.c. at joints and intermediate joists. Face layer joints offset 24" (610 mm) from base layer joints, 1-1/2" (38 mm) Type G drywall screws placed 2" (51 mm) back on either side of face layer end joints 12" (305 mm) o.c. Wood joist supporting 1/2" (12.7 mm) plywood with exterior glue applied perpendicular to top of joists with 8d nails. Ceiling provides one-hour fire resistance protection for framing, including trusses.

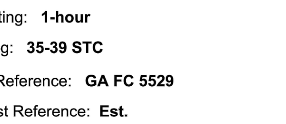

Hourly Rating: **1-hour**

STC Rating: **35-39 STC**

Fire Test Reference: **GA FC 5529**

Sound Test Reference: **Est.**

Approved for Assembly: **DensArmor Plus® Fireguard C® Products**
DensArmor Plus® Fireguard® Products
DensElement™ Barrier Sheathing
DensGlass® Fireguard® Sheathing
DensShield® Fireguard® Tile Backer
ToughRock® Fireguard C® Products
ToughRock® Fireguard X™ Mold-Guard™ Products
ToughRock® Fireguard X™ Products
ToughRock® Lite-Weight Fire-Rated Products

1. DensArmor Plus Fireguard: For certain proprietary ULC assemblies identified above, DensArmor Plus® Fireguard C® (Type DAPC) interior panels have not been approved by ULC for listing in such assemblies as of the date of this publication in lieu of DensArmor Plus® Fireguard® High-Performance (Type DAP) interior panels. Please check with ULC for current information.n.
2. Proprietary GA-600 Designs: Assemblies listed as proprietary in the GA-600 Fire Resistance Design Manual only list one product per manufacturer and may not include all products referenced in the illustrations above. Please consult the specified UL, cUL, ULC or other fire listing or test for a complete list of approved products.
3. ToughRock® Lite-Weight Fire-Rated: For ULC assemblies identified above, ToughRock® Lite-Weight Fire-Rated Gypsum Board (Type LWX) is not approved by ULC for listing in such assemblies as of the date of this publication. Please check with ULC for current information.

Created and Printed – 2/20/2017 – on gpgypsum.com

© 2017. Georgia-Pacific Gypsum LLC. All rights reserved.
Unless otherwise noted, all trademarks, including the Georgia-Pacific logo, are owned by or licensed to Georgia-Pacific Gypsum LLC.

1 / A403 **1-HR. RATED CEILING ASSMEBLY - GA #FC-5529**
SCALE: N.T.S.

FINAL DRAWINGS

HEX 9 ARCHITECTS — ARCHITECTURE PLANNING
5427 Woodside Drive
Gap, PA 17527
(717) 442-9034
(717) 283-0097 fx
An LLC Company
JOSEPH TURNOWCHYK, AIA, NCARB

STATE OF NEW YORK REGISTRATION # 036357-1

ALL CONTRACTORS ARE TO VERIFY ALL DIMENSIONS, FIELD CONDITIONS AND THE WORK OF OTHER TRADES BEFORE PROCEEDING WITH THEIR WORK.

This drawing is the exclusive property of HEX 9 ARCHITECTS and may not be reproduced in any form without written authorization from HEX 9 ARCHITECTS. Unauthorized reproduction or use of any or all parts of this drawing will constitute a violation of U.S. copyright laws.

COPYRIGHT © 2018 HEX 9 ARCHITECTS ALL RIGHTS RESERVED

REVISIONS

NUMBER	DATE	REVISED BY

DATE FEBRUARY 6, 2018
DRAWN BY CMT
PROJECT NUMBER 16114

NEW FACILITY FOR:
SLEEP INN & SUITES
635 ELMIRA ROAD
ITHACA, NEW YORK 14850

CHOICE PROPERTY I.D. # NY701

FIRE RATED ASSEMBLY DETAILS

A403
DRAWING NUMBER

I:\2016\16114 SLEEP INN - ITHACA, NY\PRODUCTION\A403 RATED ASSEMBLIES.DWG 05-31-18 9:43 AM PRINTED BY: USER06

MATERIAL/COLOR SCHEDULE/COLOR LEGEND

	CODE	MATERIAL	MANUFACTURER	PATTERN NAME	PATTERN NO.	COLOR NAME	COLOR NO.	REMARKS
FLOOR	CPT-001	CARPET	CLAYTON MILLER	-	CM50500	-	CM50500	USED IN GUESTROOMS ROOMS. INSTALL w/ CPTB-001
	CPT-002	CARPET	CLAYTON MILLER	-	CM51938	IRONWEED	-	USED IN CORRIDORS/LOBBY INSET. STRIPE ON CARPET TO RUN VERTICALLY DOWN CORRIDORS. INSTALL w/ CPTB-002
	CPT-003	CARPET	CLAYTON MILLER	-	CM52166	IRONWEED	-	USED AT DOOR DROPS. INSTALL w/ CPT-002
	CPT-004	CARPET	CLAYTON MILLER	-	CM51058	-	CM50668C	USED IN MEETING ROOM. INSTALL w/ CPTB-004
	CPT-005	CARPET	CLAYTON MILLER	-	CM50500	-	CM50500	USED IN BACK OF HOUSE / BACK STAIRWELL. INSTALL w/ CPTB-005
	CT-001	CERAMIC FLOOR TILE	DALTILE	KIMONO SILK	-	WATER CHESTNUT	P323	6"x12" TILE INSTALLED w/ MAPAI - SAHARA BEIGE - 11 GROUT SPACE 1/8". RUN VERTICALLY, STACKED. USED IN GUESTROOMS. INSTALL w/ CTB-001
	CT-002	CERAMIC FLOOR TILE	DALTILE	TIMBER GLEN CONTEMPORARY	-	CHERRY	P622	6"x24" TILE INSTALLED w/ MAPAI - MOCHA - 42 GROUT SPACED 1/8". TILE TO RUN PARALLEL TO FRONT DESK IN RANDOM RUNNING BOND INSTALLATION. USED IN LOBBY/VESTIBULE/COMMUNITY ROOM & VENDING. INSTALL w/ CTB-002
	CT-003	CODE NOT USED						CODE NOT USED
	CT-004	CERAMIC FLOOR TILE	GRANITI FIANDRE	SAND HEARTH FRAMED	ST30198	-	-	SMOOTH, 12"x12" INSTALLED w/ MAPAI - STRAW - 94 GROUT SPACE 1/8". STACKED RUNNING BOND PATTERN. USED IN POOL. INSTALL w/ CTB-004
	CT-005 THRU CT-006	CODE NOT USED						CODE NOT USED
	CT-007	CERAMIC FLOOR TILE	GRANITI FIANDRE	TCL MARFIL	IRG1818094	CREME	-	MATT FINISH, 18"x18" INSTALL w/ MAPAI - BONE - 15 GROUT SPACED 1/8". USED IN BREAKFAST AREA & KITCHEN. INSTALL w/ CTB-007
	VCT-001	VINYL COMPOSITION TILE	ARMSTRONG OR EQUAL	STANDARD EXELON IMPERIAL TEXTURE	-	TBD	TBD	USED IN EMPLOYEE BREAKROOM & PBX ROOM, COLOR TO BE DETERMINED BY OWNER. INSTALL w/ RCB-001
	RBR-001	RUBBER FLOORING	MATS INC.	DEBOLON RX	-	CHESTNUT	661-304	USED IN ELEVATOR / FITNESS CENTER. INSTALL w/ RCB-001
	MAT-001	WALK-OFF MAT	AMERICAN HOTEL REGISTER	X248734X6033	-	CHARCOAL	-	4x6 MAT, USED IN VESTIBULE
	CONC-001	SEALED CONCRETE	-	-	-	-	-	USED IN MECHANICAL SHAFTS, POOL EQUIP. ROOM, ELEC. ROOM, MECH. ROOM & ELEVATOR EQUIP. ROOM. INSTALL w/ RCB-001
WALL	CPTB-001	CARPET BASE	CLAYTON MILLER	-	CM50500	-	CM50500	USED IN GUESTROOMS INSTALL w/ CPT-001
	CPTB-002	CARPET BASE	CLAYTON MILLER	-	CM51938	IRONWEED	-	USED IN CORRIDORS INSTALL w/ CPT-002
	CPTB-003	CODE NOT USED						CODE NOT USED
	CPTB-004	CARPET BASE	CLAYTON MILLER	-	CM51058	-	CM50668C	USED IN MEETING ROOM INSTALL w/ CPT-004
	CPTB-005	CARPET BASE	CLAYTON MILLER	-	CM50500	-	CM50500	USED IN BACK OF HOUSE / BACK OF STAIRWELL INSTALL w/ CPT-005
	CTB-001	CERAMIC TILE BASE	DALTILE	KIMONO SILK	-	WATER CHESTNUT	P323	4"x12" BULLNOSE, USED IN GUESTROOMS BATHROOMS. INSTALL w/ CT-001
	CTB-002	CERAMIC TILE BASE	DALTILE	TIMBER GLEN CONTEMPORARY	-	CHERRY	P622	4"x24" BULLNOSE, USED IN LOBBY/VESTIBULE/COMMUNITY ROOM & VENDING. INSTALL w/ CT-002
	CTB-003	CODE NOT USED						CODE NOT USED
	CTB-004	CERAMIC TILE BASE	GRANITI FIANDRE	SAND HEARTH FRAMED	ST38198	-	-	SMOOTH BULLNOSE, 3"x12". USED IN POOL w/ CT-004
	CTB-005 THRU CTB-006	CODE NOT USED						CODE NOT USED
	CTB-007	CERAMIC TILE BASE	GRANITI FIANDRE	TCL MARFIL	IRG312BT94	CREME	-	MATT BULLNOSE, 2"x18". USED IN BREAKFAST AREA w/ CT-007
	CTB-008	CODE NOT USED						CODE NOT USED
	RCB-001	RUBBER BASE	JOHNSONITE	TRADITIONAL 4"	-	EITHER ORE	66	USED IN ELEVATOR / FITNESS CENTER w/ RBR-001
	CT-001 THRU CT-004	CODES NOT USED						CODES NOT USED
	CT-005	CERAMIC WALL TILE	GRANITI FIANDRE	SAND HEARTH FRAMED	ST83198	-	-	SMOOTH, 3"x12", RUNNING BOND-WAINSCOT PATTERN. USED ON POOL WALLS w/ CT-006. 1/8" GROUT: MAPEI- STRAW 94
	CT-006	CERAMIC WALL TILE	GRANITI FIANDRE	GEOLOGICA - NEW STONE	TS003M312	COPPER RED	-	SLATE FINISH, 3"x12", ACCENT AT WAINSCOT. USED ON POOL WALLS w/ CT-005
	CT-007 THRU CT-008	CODES NOT USED						CODES NOT USED
	CT-009	CERAMIC WALL TILE	DALTILE	KIMONO SILK	-	WATER CHESTNUT	P323	6"x12" TILE INSTALLED w/ MAPAI- SAHARA BEIGE - 11 GROUT. RUN VERTICALLY, STACKED. USED ON JACUZZI TUB FACE
	VWC-001 THRU VWC-003	CODE NOT USED						CODE NOT USED
	VWC-004	VINYL WALLCOVERING	MDC	BOLTA CONTRACT 3 VOLUME SET	CHO181/4708	KASUMI OAKMOSS	-	54", TYPE II. USED BEHIND FRONT DESK
	VWC-007	VINYL WALLCOVERING	US VINYL	FAWN	CH7350/21	-	-	54", TYPE II. USED IN WORK ROOM, GM OFFICES AND MEETING ROOM
	VWC-008B	VINYL WALLCOVERING	US VINYL	SKY	CH7349	-	-	54", TYPE II. 'SKY' ACCENT
	WG-001C	WALL GRAPHIC	VOMELA	3M SCOTCHCAL ELECTROCUT FILM	-	PEARL GRAY	7725-11	'SKY' PUBLIC SPACE GRAPHIC
	WG-002C	WALL GRAPHIC	VOMELA	3M SCOTCHCAL ELECTROCUT FILM	-	PEARL GRAY	7725-0349	'SKY' POOL AREA GRAPHIC, INSTALLED OVER 'DOVER WHITE SW6385' WALL COLOR.
	PT-001	WALL PAINT	SHERWIN WILLIAMS	-	-	NATURAL CHOICE	SW7011	USED IN GUESTROOMS
	PT-002 THRU PT-004	CODES NOT USED						CODES NOT USED
	PT-005B	WALL PAINT	SHERWIN WILLIAMS	-	-	MOODY BLUE	SW6221	'SKY' ACCENT USED IN GUESTROOMS ON HEADBOARD WALL & BATH SIDE WALL
	PT-006	WALL PAINT	SHERWIN WILLIAMS	-	-	OYSTER WHITE	SW7637	EGGSHELL FINISH, USED IN LOBBY / BREAKFAST AREA / FITNESS CENTER / VENDING / BACK OF HOUSE & GUEST BATHROOMS
	PT-007	WALL PAINT	SHERWIN WILLIAMS	-	-	STONE LION	SW7507	USED IN CORRIDORS / GUEST LAUNDRY / PUBLIC RESTROOMS
	PT-008	WALL PAINT	SHERWIN WILLIAMS	-	-	CHINA DOLL	SW7517	ACCENT USED IN EACH GUESTROOM ENTRY DOOR OPENING
	PT-009	TRIM PAINT	SHERWIN WILLIAMS	-	-	LOGGIA	SW7506	USED ON TRIM THROUGHOUT, GUEST DOOR & FRAME FINISH
	PT-010B	WALL PAINT	SHERWIN WILLIAMS	-	-	MOODY BLUE	SW6221	'SKY' ACCENT USED IN BREAKFAST AREA & WHERE NOTED
	PT-011	WALL PAINT	SHERWIN WILLIAMS	-	-	LOGGIA	SW7506	USED IN EMPLOYEE RESTROOM / LAUNDRY ROOM
	PT-012	WALL PAINT	SHERWIN WILLIAMS	-	-	DOVER WHITE	SW6385	USED IN POOL AREA
	LAM-003	PLASTIC LAMINATE	WILSONART	-	-	BRIGHTON WALNUT	7922K-07	ELEVATOR WALL FINISHES
CLG	CET-001	ACOUSTICAL CEILING	USG	ECLIPSE CLIMA PLUS	-	PARCHMENT	103	2x2 DROPPED CEILING TILE w/ COORESPONDING GRID
	CET-002	ACOUSTICAL CEILING	USG	ECLIPSE CLIMA PLUS	-	PARCHMENT	103	2x4 DROPPED CEILING TILE w/ COORESPONDING GRID
	CET-003	ACOUSTICAL CEILING	USG	-	-	PARCHMENT	103	2x4 CLEANABLE/WASHABLE DROPPED CEILING TILE w/ COORESPONDING GRID
	PT-013	CEILING PAINT	SHERWIN WILLIAMS	-	-	CEILING BRIGHT WHITE	SW7007	USED ON G.W.B. CEILINGS THROUGHOUT
MISC.	PT-014	DOOR STAIN	MOHAWK/TACC	ROTARY NATURAL - BIRCH	-	ESPRESSO	9416	USED ON DOORS THROUGHOUT
	STN-001	GRANITE SURFACE	DERNIS	POLISHED	-	TIGER SKIN WHITE	-	USED ON GUESTROOM VANITY TOP
	STN-002	CULTURED MARBLE SURFACE	MINCEY MARBLE	HORIZONTAL	TS-VN 6x12	WHITE QUARTZ	7N06	MATTE FINISH, SHOWER PAN TO BE 2250 SOLID WHITE. USED ON GUEST BATHROOM TUBSURROUNDS
	STN-003	GRANITE SURFACE	DALTILE	POLISHED	-	ABSOLUTE BLACK	G771-BLKAB	3CM, USED ON RECEPTION DESK TOP / BUFFET COUNTER TOP / COFFEE BAR COUNTER TOP / PUBLIC RESTROOM VANITY TOP
	STN-004 THRU STN-005	CODES NOT USED						CODES NOT USED
	STN-006	CULTURED MARBLE SURFACE	INTERNATIONAL MARBLE INDUSTRIES	MATTE	WS-4	WHITE w/ WHITE SWIRLS	-	3/4" THICK, USED ON WINDOW SILLS & GUEST ROOM RESTROOM THRESHOLDS
	LAM-001	PLASTIC LAMINATE	WILSONART	-	-	BRIGHTON WALNUT	7922K-07	USED ON OFFICE DESK TOP / WORK ROOM COUNTER / LAUNDRY ROOM CABINETRY
	LAM-002	PLASTIC LAMINATE	ARBORITE	-	W-435-FP	MACASSAR RUSSET	-	USED ON RECEPTION DESK FACADE / BREAKFAST CABINETS / COFFEE BAR CABINETS
	LAM-003	PLASTIC LAMINATE	WILSONART	-	-	BRIGHTON WALNUT	7922K-07	USED ON ELEVATOR WALLS
	LAM-004	PLASTIC LAMINATE	WILSONART	-	-	BLACK	1595-60	USED ON LAUNDRY ROOM COUNTER TOP

NOTE(S):

1. ALL SUBSTITUTIONS OF MATERIAL, MANUFACTURER, PATTERN, OR COLOR MUST BE APPROVED BY OWNER AND/OR ARCHITECT PRIOR TO INSTALLATION.
2. PROVIDE MOISTURE RESISTANT G.W.B. ON WALLS & CEILING OF POOL ROOM 117, POOL EQUIP ROOM 118 & MECH ROOM 144. (W/ MOISTURE RESISTANT PAINT)

INTERIOR FINISH NOTE(S)

1. SEE A500 FOR COMPLETE FINISH SCHEDULE.
2. SEE TYPICAL ROOM BLOW-UPS & LOBBY BLOW-UP FOR MORE FINISH & EQUIPMENT DETAILS.
3. SEE A501 FOR FURNITURE SCHEDULE.
4. SEE E301 FOR GUEST ROOM ELECTRICAL PLANS.

HEX 9 ARCHITECTS — ARCHITECTURE PLANNING
5427 Woodside Drive
Gap, PA 17527
(717) 442-9034
(717) 283-0097 fx
An LLC Company
JOSEPH TURNOWCHYK, AIA, NCARB

STATE OF NEW YORK REGISTRATION # 036357-1

ALL CONTRACTORS ARE TO VERIFY ALL DIMENSIONS, FIELD CONDITIONS AND THE WORK OF OTHER TRADES BEFORE PROCEEDING WITH THEIR WORK.

This drawing is the exclusive property of HEX 9 ARCHITECTS and may not be reproduced in any form without written authorization from HEX 9 ARCHITECTS. Unauthorized reproduction or use of any or all parts of this drawing will constitute a violation of U.S. copyright laws.

COPYRIGHT © 2018 HEX 9 ARCHITECTS ALL RIGHTS RESERVED

REVISIONS

NUMBER	DATE	REVISED BY

DATE: FEBRUARY 6, 2018
DRAWN BY: CMT
PROJECT NUMBER: 16114

NEW FACILITY FOR:
SLEEP INN & SUITES
CHOICE PROPERTY I.D. # NY701
635 ELMIRA ROAD
ITHACA, NEW YORK 14850

INTERIOR FINISH SCHEDULE

A500
DRAWING NUMBER

FINAL DRAWINGS

I:\2016\16114 SLEEP INN - ITHACA, NY\PRODUCTION\A500 FINISH SCHEDULE.DWG 05-31-18 9:42 AM PRINTED BY: USER06

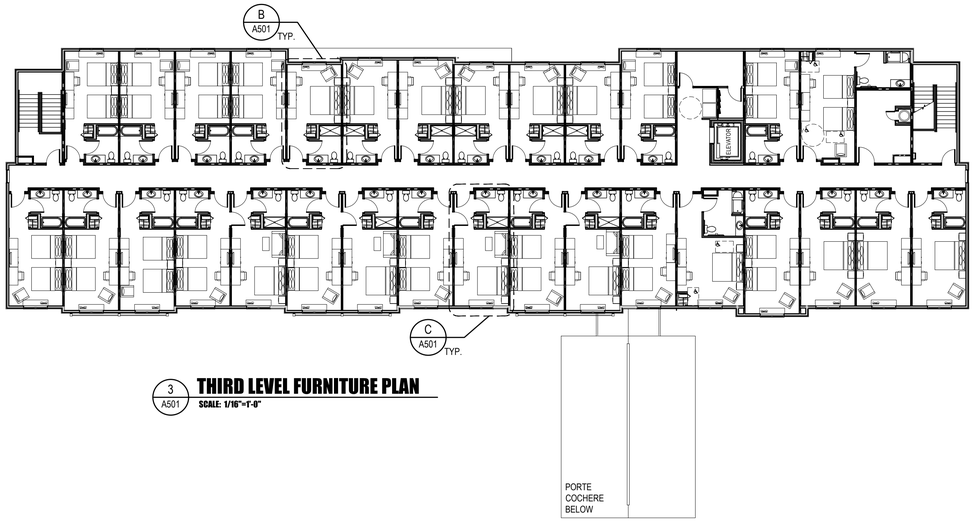

3 A501 **THIRD LEVEL FURNITURE PLAN**
SCALE: 1/16"=1'-0"

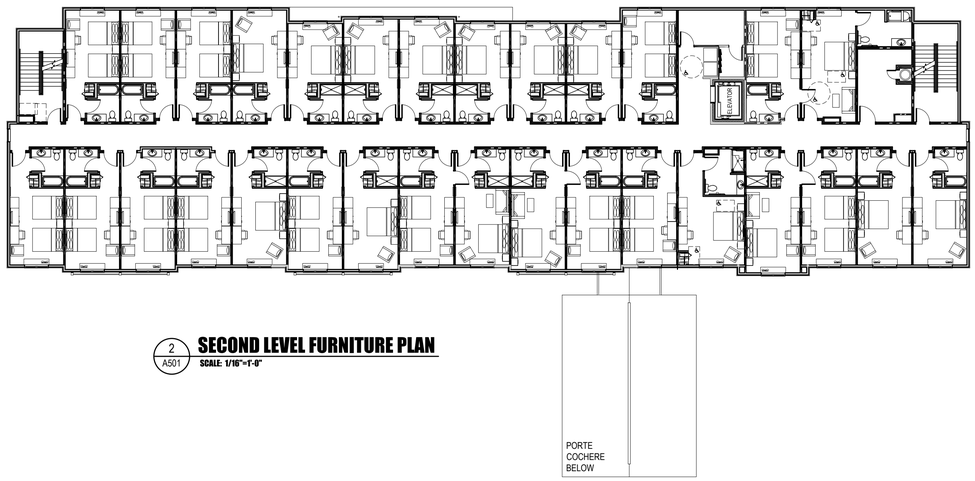

2 A501 **SECOND LEVEL FURNITURE PLAN**
SCALE: 1/16"=1'-0"

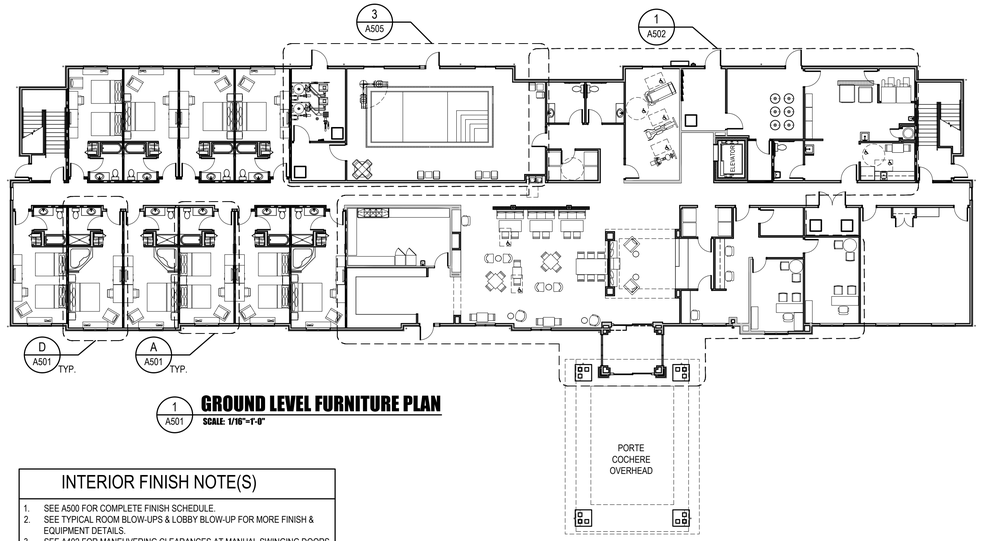

1 A501 **GROUND LEVEL FURNITURE PLAN**
SCALE: 1/16"=1'-0"

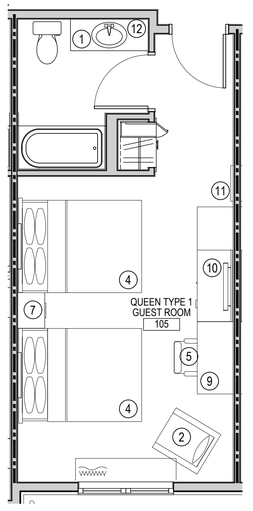

A A501 **ENLARGED TYPICAL QUEEN FURNITURE PLAN**
SCALE: 1/4"=1'-0"

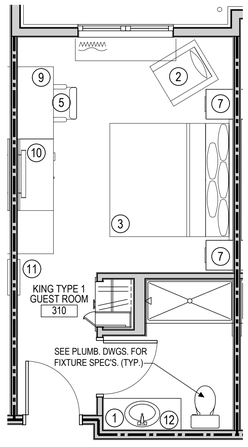

B A501 **ENLARGED TYPICAL KING FURNITURE PLAN**
SCALE: 1/4"=1'-0"

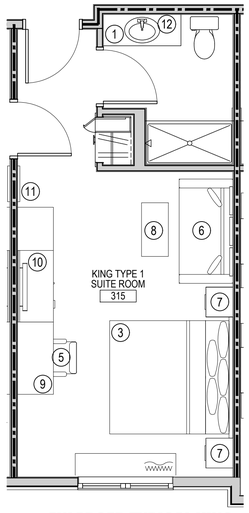

C A501 **ENLARGED TYPICAL KING SUITE FURNITURE PLAN**
SCALE: 1/4"=1'-0"

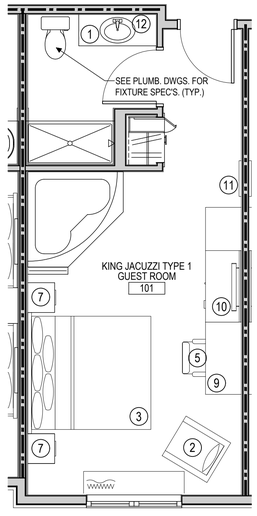

D A501 **ENLARGED TYPICAL KING JACUZZI FURNITURE PLAN**
SCALE: 1/4"=1'-0"

INTERIOR FINISH NOTE(S)

1. SEE A500 FOR COMPLETE FINISH SCHEDULE.
2. SEE TYPICAL ROOM BLOW-UPS & LOBBY BLOW-UP FOR MORE FINISH & EQUIPMENT DETAILS.
3. SEE A402 FOR MANEUVERING CLEARANCES AT MANUAL SWINGING DOORS
4. SEE 8/A402 FOR IDENTIFICATION SIGN ELEVATION

FURNITURE SCHEDULE

#	DESCRIPTION
1	VANITY BASE
2	LOUNGE CHAIR
3	KING BED
4	QUEEN BED
5	ERGONOMIC DESK CHAIR
6	SLEEPER SOFA
7	NIGHTSTAND
8	COFFEE TABLE
9	DESK w/ MICROFRIDGE UNIT
10	MEDIA BOARD
11	MIRROR - FULL LENGTH
12	MIRROR - VANITY
13	SOFA
14	COCKTAIL TABLE
15	2-TOP DINING TABLE
16	4-TOP DINING TABLE
17	DINING CHAIR
18	BANQUETTE SEATING
19	BAR STOOL
20	ACCENT LOUNGE CHAIR
21	OFFICE DESK
22	OFFICE GUEST CHAIR

HEX 9 ARCHITECTS
5427 Woodside Drive
Gap, PA 17527
(717) 442-9034
(717) 283-0097 fx
An LLC Company
JOSEPH TURNOWCHYK, AIA, NCARB

STATE OF
NEW YORK
REGISTRATION #
036357-1

ALL CONTRACTORS ARE TO VERIFY ALL DIMENSIONS, FIELD CONDITIONS AND THE WORK OF OTHER TRADES BEFORE PROCEEDING WITH THEIR WORK.

This drawing is the exclusive property of HEX 9 ARCHITECTS and may not be reproduced in any form without written authorization from HEX 9 ARCHITECTS. Unauthorized reproduction or use of any or all parts of this drawing will constitute a violation of U.S. copyright laws.
COPYRIGHT © 2018 HEX 9 ARCHITECTS ALL RIGHTS RESERVED

REVISIONS

NUMBER	DATE	REVISED BY

DATE	FEBRUARY 6, 2018
DRAWN BY	CMT
PROJECT NUMBER	16114

NEW FACILITY FOR:
SLEEP INN & SUITES
CHOICE PROPERTY I.D. # NY701
635 ELMIRA ROAD
ITHACA, NEW YORK 14850

OVERALL & ENLARGED TYP. ROOM FURNITURE PLANS

A501
DRAWING NUMBER

FINAL DRAWINGS

I:\2018\16114 SLEEP INN - ITHACA, NY\PRODUCTION\A501 FURNITURE PLANS.DWG 05-31-18 9:41 AM PRINTED BY: USER06

EQUIPMENT SCHEDULE

#	QTY	DESCRIPTION	ELECTRICAL VOLTS	ELECTRICAL PHASE	ELECTRICAL AMPS	PLUMBING CW	PLUMBING HW	PLUMBING DRAIN	PLUMBING VENT	SIZE L x D x H INCHES	MANUFACTURE, MODEL NO. & INFO	REMARKS
VENDING												
V1	3	ICE MAKER	-	-	-	-	-	-	-	30"x27½"x22"	HOSHIZAKI KML-250 MAH	FEED FROM WATER FILTER
V2	3	ICE DISPENSER	-	-	-	-	-	-	-	30"x30"x53"	HOSHIZAKI DB-200H	STORAGE BIN CAPACITY; PUSH BUTTON MECHANISM
V3	4	VENDING MACHINE	-	-	-	-	-	-	-	-	-	-
V4	3	WATER FILTER	-	-	-	-	-	-	-	30.5" H	HOSHIZAKI 9320-21H	SINGLE FILTER
FOOD PREPARATION												
K1	1	REFRIDGERATOR	-	-	-	-	-	-	-	52"x33½"x84"	VICTORY V-SERIES VR-2	TWO-SECTION
K2	1	FREEZER	-	-	-	-	-	-	-	24"x25"x33½"	CHAMPION UH-170B	DEPTH REFLECTS OPENED DOOR
K3	1	UNDER COUNTER DISHWASHER	-	-	-	-	-	-	-	-	-	-
K4	1	3 COMPARTMENT SINK	-	-	-	-	-	-	-	-	-	-
K4.1	1	FAUCET	-	-	-	-	-	-	-	-	-	-
K4.2	1	PRE-RINSE w/ ADD-A-FAUCET	-	-	-	-	-	-	-	-	-	-
K4.3	1	OVERSHELVES	-	-	-	-	-	-	-	-	-	-
K6	1	STORAGE SHELVING	-	-	-	-	-	-	-	-	-	-
K7	1	WORKTABLE	-	-	-	-	-	-	-	-	-	-
K7.1	1	WORKTABLE w/ DRAWER / CAN OPENER	-	-	-	-	-	-	-	-	-	-
K8	1	OVERSHELF	-	-	-	-	-	-	-	-	-	-
K8.1	1	OVERSHELF	-	-	-	-	-	-	-	-	-	-
K9	1	MICROWAVE	-	-	-	-	-	-	-	-	-	-
K9.1	1	MICROWAVE SHELF	-	-	-	-	-	-	-	-	-	-
K10	1	HAND SINK	-	-	-	-	-	-	-	-	-	-
HOTEL LAUNDRY												
L1	1	#80 WASHER	-	-	-	-	-	-	-	41½"x51½"x68½"	UNIMAC UWN080T3V	INDIRECT WASTE TO FLOOR TROUGH
L1A	1	#60 WASHER	-	-	-	-	-	-	-	36½"x45"x64½"	UNIMAC UWN060T3V	INDIRECT WASTE TO FLOOR TROUGH TWO (2) HOT WATER LINES FOR EACH MACHINE
L2	1	#75 DRYER	-	-	-	-	-	-	-	38½"x53"x76½"	UNIMAC UT075NOM	-
L2A	1	#120 DRYER	-	-	-	-	-	-	-	-	-	TWO (2) HOT WATER LINES FOR EACH MACHINE
L3	1	FOLDING TABLE	-	-	-	-	-	-	-	-	-	OPTIONAL
L4	1	SOAK SINK	-	-	-	-	-	-	-	-	-	-
L5	1	FEED TRUCK	-	-	-	-	-	-	-	-	-	-
L6	1	UTILITY TRUCK	-	-	-	-	-	-	-	-	-	-
L7	1	FOLDING TABLE	-	-	-	-	-	-	-	-	-	-
L8	1	SHEET FOLDER	-	-	-	-	-	-	-	-	-	-
L9	1	MOBILE SHELVING	-	-	-	-	-	-	-	-	-	-
L10	1	CHEMICAL SUPPLIES	-	-	-	-	-	-	-	-	-	-
GUEST LAUNDRY												
L11	1	GUEST WASHER	-	-	-	-	-	-	-	25½"x28"x43"	SPEEDQUEEN SWT121	COIN OPERATED; WASH CYLINDER CAPACITY; HEIGHT MEASURED AT METER CASE (TYP.)
L12	1	GUEST DRYER	-	-	-	-	-	-	-	26½"x28"x43"	SPEEDQUEEN SDET07	COIN OPERATED; DRUM CAPACITY; HEIGHT MEASURED AT METER CASE (TYP.)
L13	1	GUEST FOLDING TABLE	-	-	-	-	-	-	-	-	-	-

NOTE (S):
1. EQUIPMENT ITEMS ARE AVAILABLE THROUGH QUALIFIED VENDORS ON CHOICEBUYS.COM

INTERIOR FINISH NOTE(S)

1. SEE A500 FOR COMPLETE FINISH SCHEDULE.
2. SEE TYPICAL ROOM BLOW-UPS & LOBBY BLOW-UP FOR MORE FINISH & EQUIPMENT DETAILS.

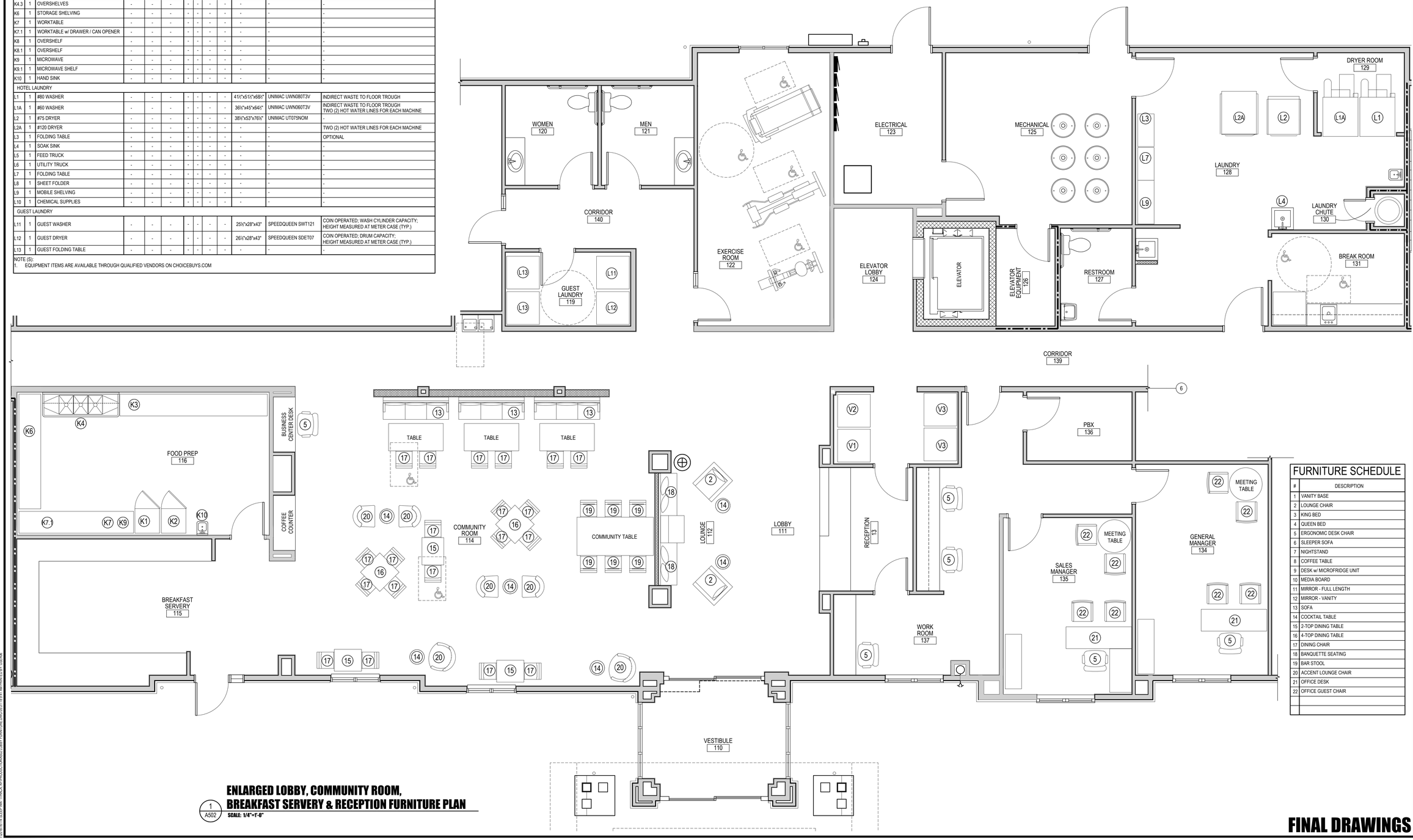

FURNITURE SCHEDULE

#	DESCRIPTION
1	VANITY BASE
2	LOUNGE CHAIR
3	KING BED
4	QUEEN BED
5	ERGONOMIC DESK CHAIR
6	SLEEPER SOFA
7	NIGHTSTAND
8	COFFEE TABLE
9	DESK w/ MICROFRIDGE UNIT
10	MEDIA BOARD
11	MIRROR - FULL LENGTH
12	MIRROR - VANITY
13	SOFA
14	COCKTAIL TABLE
15	2-TOP DINING TABLE
16	4-TOP DINING TABLE
17	DINING CHAIR
18	BANQUETTE SEATING
19	BAR STOOL
20	ACCENT LOUNGE CHAIR
21	OFFICE DESK
22	OFFICE GUEST CHAIR

ENLARGED LOBBY, COMMUNITY ROOM, BREAKFAST SERVERY & RECEPTION FURNITURE PLAN
1 / A502 — SCALE: 1/4"=1'-0"

FINAL DRAWINGS

HEX 9 ARCHITECTS
An LLC Company
5427 Woodside Drive
Gap, PA 17527
(717) 442-9034
(717) 283-0097 fx
JOSEPH TURNOWCHYK, AIA, NCARB

STATE OF NEW YORK REGISTRATION # 036357-1

ALL CONTRACTORS ARE TO VERIFY ALL DIMENSIONS, FIELD CONDITIONS AND THE WORK OF OTHER TRADES BEFORE PROCEEDING WITH THEIR WORK.

This drawing is the exclusive property of HEX 9 ARCHITECTS and may not be reproduced in any form without written authorization from HEX 9 ARCHITECTS. Unauthorized reproduction or use of any or all parts of this drawing will constitute a violation of U.S. copyright laws.
COPYRIGHT © 2018 HEX 9 ARCHITECTS ALL RIGHTS RESERVED

REVISIONS

NUMBER	DATE	REVISED BY

DATE: FEBRUARY 6, 2018
DRAWN BY: CMT
PROJECT NUMBER: 16114

NEW FACILITY FOR:
SLEEP INN & SUITES CHOICE PROPERTY I.D. # NY701
635 ELMIRA ROAD
ITHACA, NEW YORK 14850

ENLARGED LOBBY FURNITURE PLAN

A502
DRAWING NUMBER

I:\2016\16114 SLEEP INN - ITHACA, NY\PRODUCTION\A502 LOBBY FURNITURE.DWG 9-5-18 9:41 AM PRINTED BY: JSR/MB

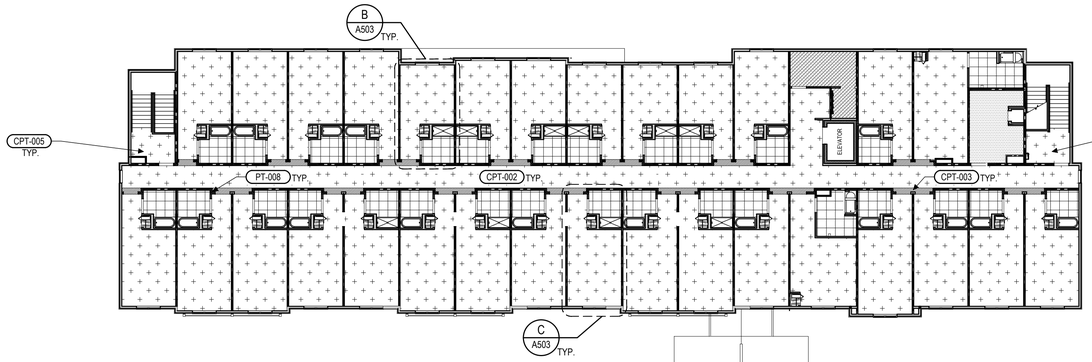

3 A503 THIRD LEVEL FLOOR FINISH PLAN

SCALE: 1/16"=1'-0"

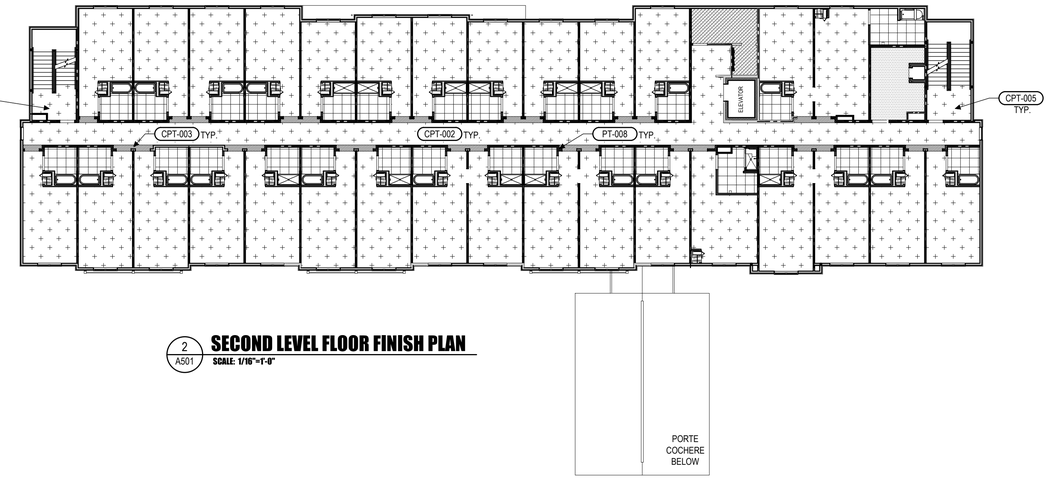

2 A501 SECOND LEVEL FLOOR FINISH PLAN

SCALE: 1/16"=1'-0"

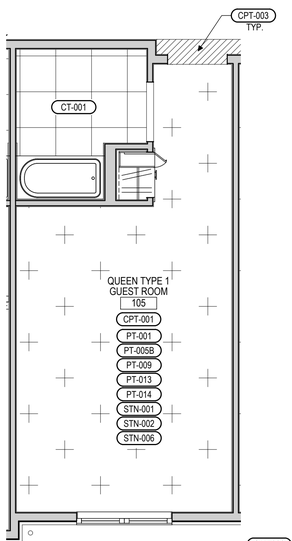

A A503 ENLARGED TYPICAL QUEEN FINISH PLAN

SCALE: 1/4"=1'-0"

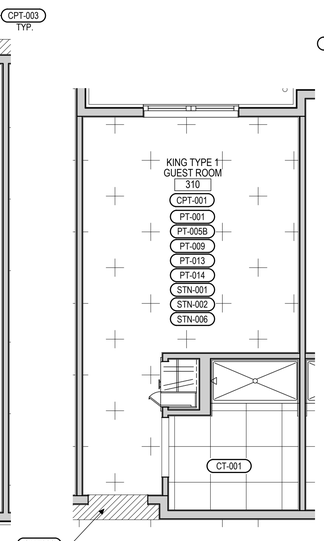

B A503 ENLARGED TYPICAL KING FINISH PLAN

SCALE: 1/4"=1'-0"

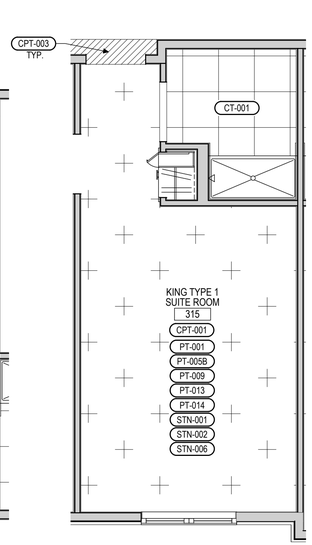

C A503 ENLARGED TYPICAL KING SUITE FINISH PLAN

SCALE: 1/4"=1'-0"

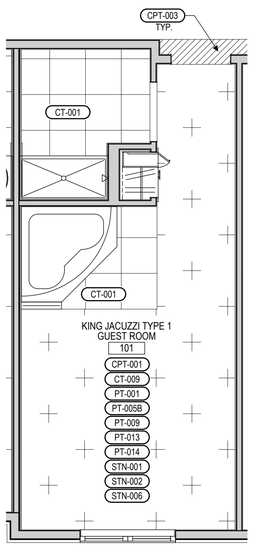

D A503 ENLARGED TYPICAL KING JACUZZI FINISH PLAN

SCALE: 1/4"=1'-0"

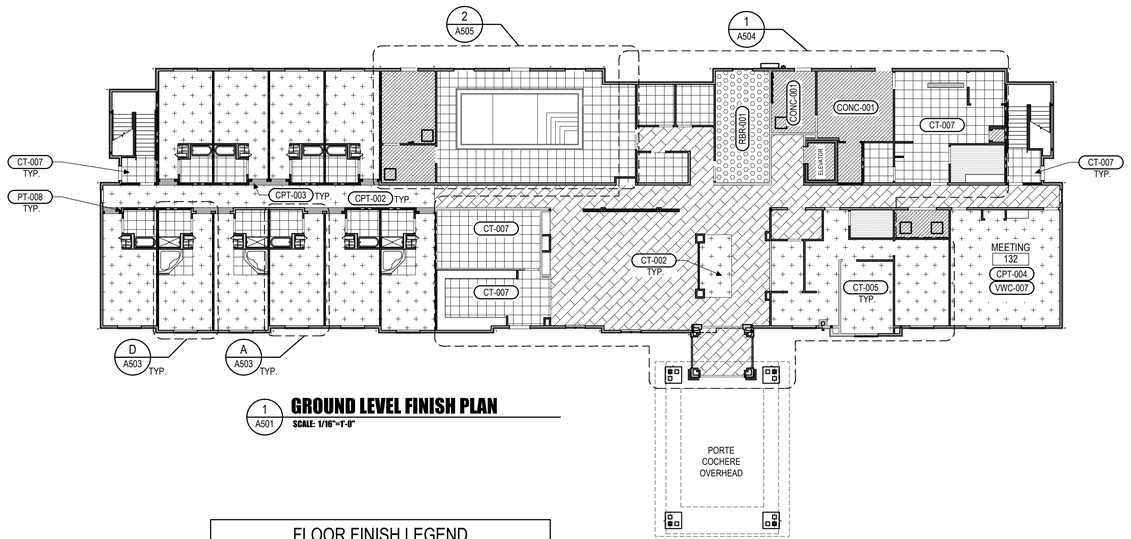

1 A501 GROUND LEVEL FINISH PLAN

SCALE: 1/16"=1'-0"

FLOOR FINISH LEGEND

SYMBOL	DESCRIPTION
	INSTALL NEW CARPET OVER PREPARED SURFACE. SEE MATERIAL SCHEDULE ON SHEET A500.
	INSTALL NEW TILE OVER PREPARED SURFACE. SEE MATERIAL SCHEDULE ON SHEET A500.
	INSTALL NEW DOOR DROP CARPET OVER PREPARED SURFACE. SEE MATERIAL SCHEDULE ON SHEET A500.
	INSTALL NEW TILE OVER PREPARED SURFACE. SEE MATERIAL SCHEDULE ON SHEET A500.
	INSTALL NEW RUBBER FLOORING OVER PREPARED SURFACE. SEE MATERIAL SCHEDULE ON SHEET A500.
	SEALED CONCRETE SURFACE. SEE MATERIAL SCHEDULE ON SHEET A500.
	INSTALL NEW VINYL COMPOSITION TILE OVER PREPARED SURFACE. SEE MATERIAL SCHEDULE ON SHEET A500.

INTERIOR FINISH NOTE(S)

1. SEE A500 FOR COMPLETE FINISH SCHEDULE.
2. SEE TYPICAL ROOM BLOW-UPS & LOBBY BLOW-UP FOR MORE FINISH & EQUIPMENT DETAILS.

FINAL DRAWINGS

HEX 9 ARCHITECTS
5427 Woodside Drive
Gap, PA 17527
(717) 442-9054
(717) 283-0097 fx
An LLC Company
JOSEPH TURNOWCHYK, AIA, NCARB

STATE OF
NEW YORK
REGISTRATION #
036357-1

ALL CONTRACTORS ARE TO VERIFY ALL DIMENSIONS, FIELD CONDITIONS AND THE WORK OF OTHER TRADES BEFORE PROCEEDING WITH THEIR WORK.

This drawing is the exclusive property of HEX 9 ARCHITECTS and may not be reproduced in any form without written authorization from HEX 9 ARCHITECTS. Unauthorized reproduction or use of any or all parts of this drawing will constitute a violation of U.S. copyright laws.

COPYRIGHT © 2018 HEX 9 ARCHITECTS ALL RIGHTS RESERVED

REVISIONS

NUMBER	DATE	REVISED BY

DATE FEBRUARY 6, 2018
DRAWN BY CMT
PROJECT NUMBER 16114

NEW FACILITY FOR:
SLEEP INN & SUITES
635 ELMIRA ROAD
ITHACA, NEW YORK 14850

CHOICE PROPERTY I.D. # NY701

OVERALL & ENLARGED TYP. ROOM FINISH PLANS

A503
DRAWING NUMBER

20180104 SLEEP INN - ITHACA, NY\PRODUCTION\A503 FLOOR FINISH PLANS.DWG 5/3/2018 11:51:41 AM PRINTED BY: USER

INTERIOR FINISH NOTE(S)

1. SEE A500 FOR COMPLETE FINISH SCHEDULE.
2. SEE TYPICAL ROOM BLOW-UPS & LOBBY BLOW-UP FOR MORE FINISH & EQUIPMENT DETAILS.
3. SEE A501 FOR FURNITURE SCHEDULE.
4. SEE E301 FOR GUEST ROOM ELECTRICAL PLANS.

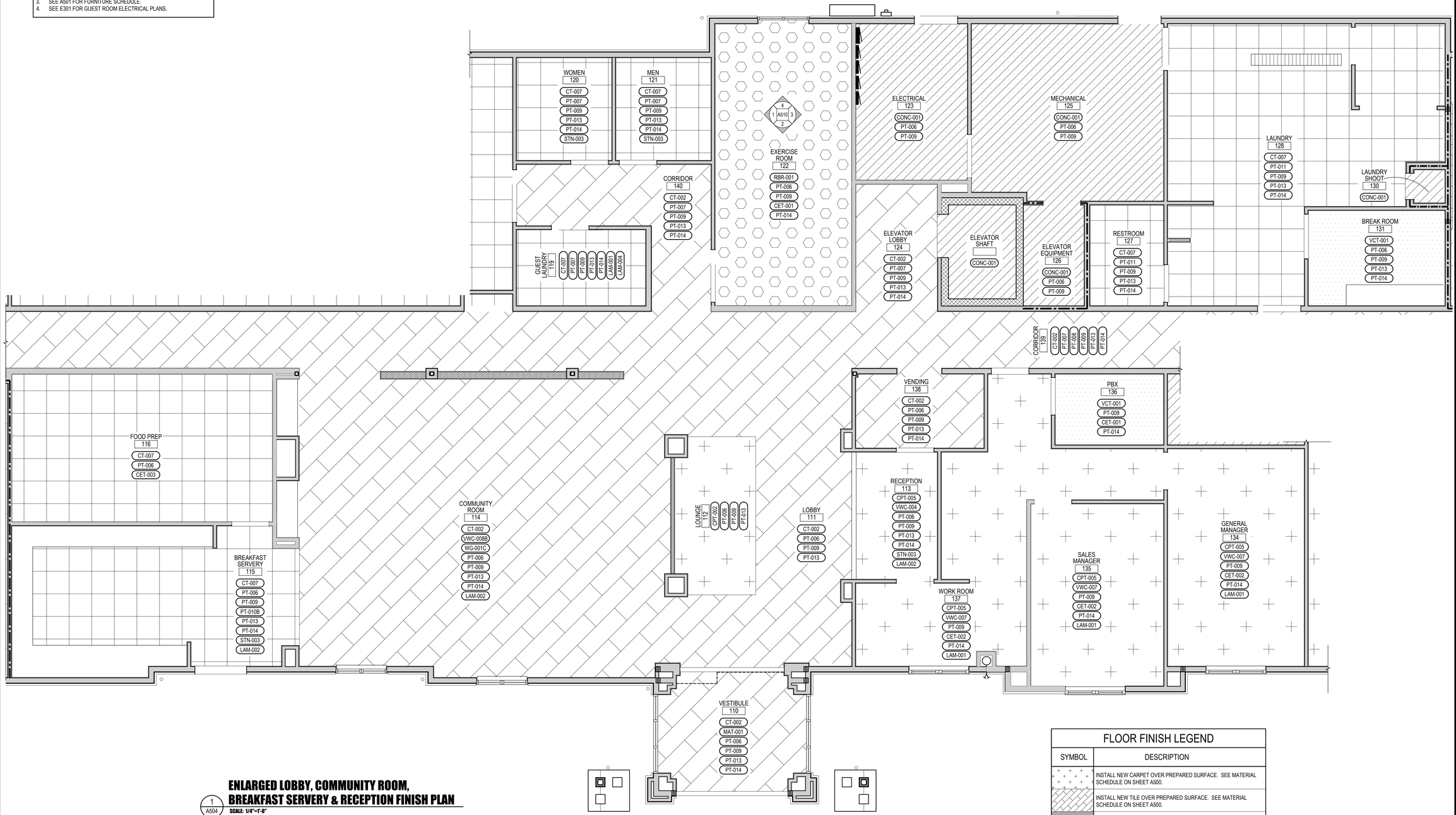

ENLARGED LOBBY, COMMUNITY ROOM, BREAKFAST SERVERY & RECEPTION FINISH PLAN

1 / A504

SCALE: 1/4"=1'-0"

FLOOR FINISH LEGEND

SYMBOL	DESCRIPTION
	INSTALL NEW CARPET OVER PREPARED SURFACE. SEE MATERIAL SCHEDULE ON SHEET A500.
	INSTALL NEW TILE OVER PREPARED SURFACE. SEE MATERIAL SCHEDULE ON SHEET A500.
	INSTALL NEW DOOR DROP CARPET OVER PREPARED SURFACE. SEE MATERIAL SCHEDULE ON SHEET A500.
	INSTALL NEW TILE OVER PREPARED SURFACE. SEE MATERIAL SCHEDULE ON SHEET A500.
	INSTALL NEW RUBBER FLOORING OVER PREPARED SURFACE. SEE MATERIAL SCHEDULE ON SHEET A500.
	SEALED CONCRETE SURFACE. SEE MATERIAL SCHEDULE ON SHEET A500.
	INSTALL NEW VINYL COMPOSITION TILE OVER PREPARED SURFACE. SEE MATERIAL SCHEDULE ON SHEET A500.

FINAL DRAWINGS

HEX 9 ARCHITECTS
An LLC Company
5427 Woodside Drive
Gap, PA 17527
(717) 442-9034
(717) 283-0097 fx
JOSEPH TURNOWCHYK, AIA, NCARB
STATE OF NEW YORK REGISTRATION # 036357-1

ALL CONTRACTORS ARE TO VERIFY ALL DIMENSIONS, FIELD CONDITIONS AND THE WORK OF OTHER TRADES BEFORE PROCEEDING WITH THEIR WORK.

This drawing is the exclusive property of HEX 9 ARCHITECTS and may not be reproduced in any form without written authorization from HEX 9 ARCHITECTS. Unauthorized reproduction or use of any or all parts of this drawing will constitute a violation of U.S. copyright laws.

COPYRIGHT © 2018 HEX 9 ARCHITECTS ALL RIGHTS RESERVED

REVISIONS

NUMBER	DATE	REVISED BY

DATE: FEBRUARY 6, 2018
DRAWN BY: CMT
PROJECT NUMBER: 16114

NEW FACILITY FOR:
SLEEP INN & SUITES CHOICE PROPERTY I.D. # NY701
635 ELMIRA ROAD
ITHACA, NEW YORK 14850

ENLARGED LOBBY FINISH PLAN

A504
DRAWING NUMBER

I:2016\16114 SLEEP INN - ITHACA, NY\PRODUCTION\A504 LOBBY FLOOR FINISH.DWG 05-31-18 9:41 AM PRINTED BY: USER06

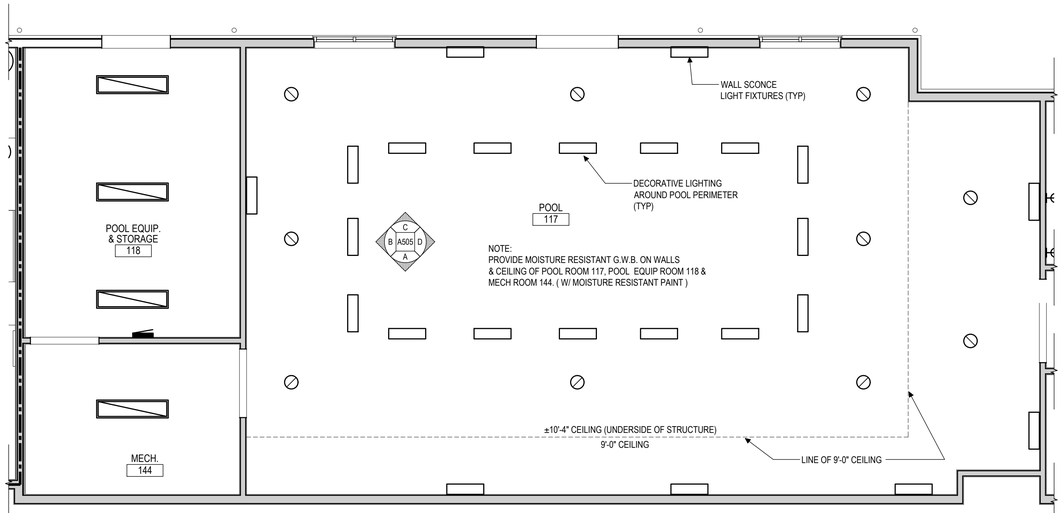

4 A505 **ENLARGED INDOOR POOL REFLECTED CEILING PLAN**
SCALE: 1/4"=1'-0"

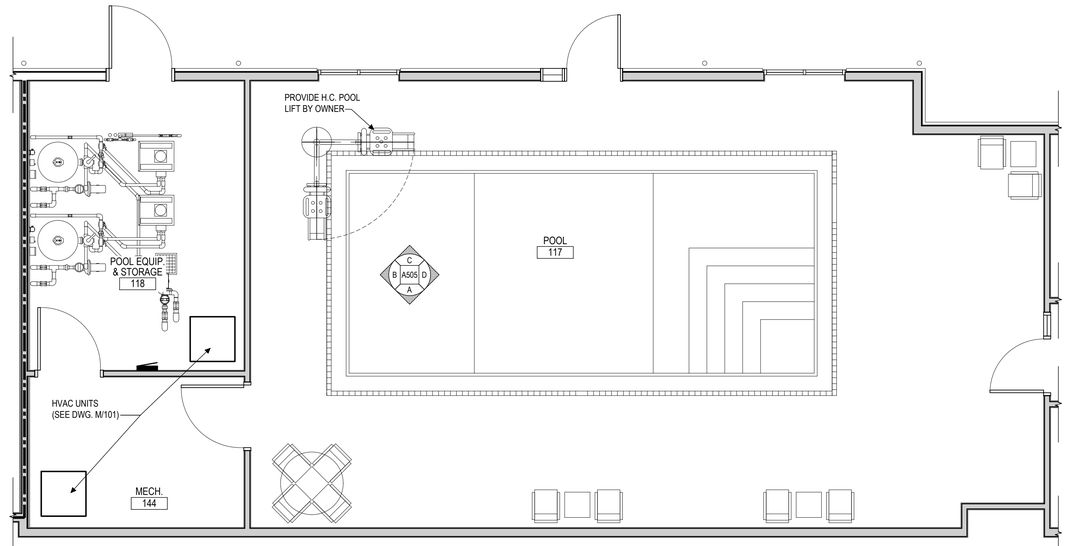

3 A505 **ENLARGED INDOOR POOL FURNITURE PLAN**
SCALE: 1/4"=1'-0"

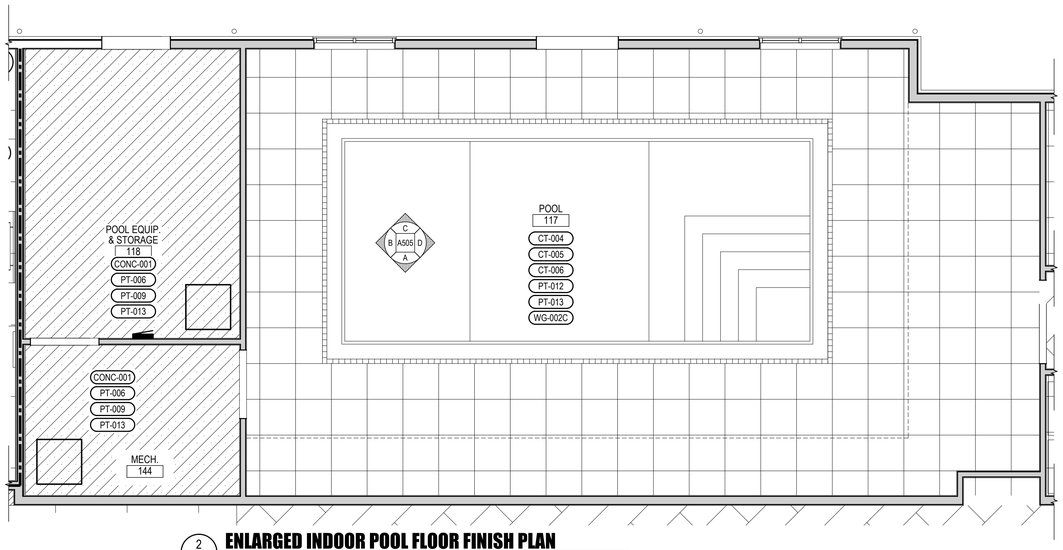

2 A505 **ENLARGED INDOOR POOL FLOOR FINISH PLAN**
SCALE: 1/4"=1'-0"

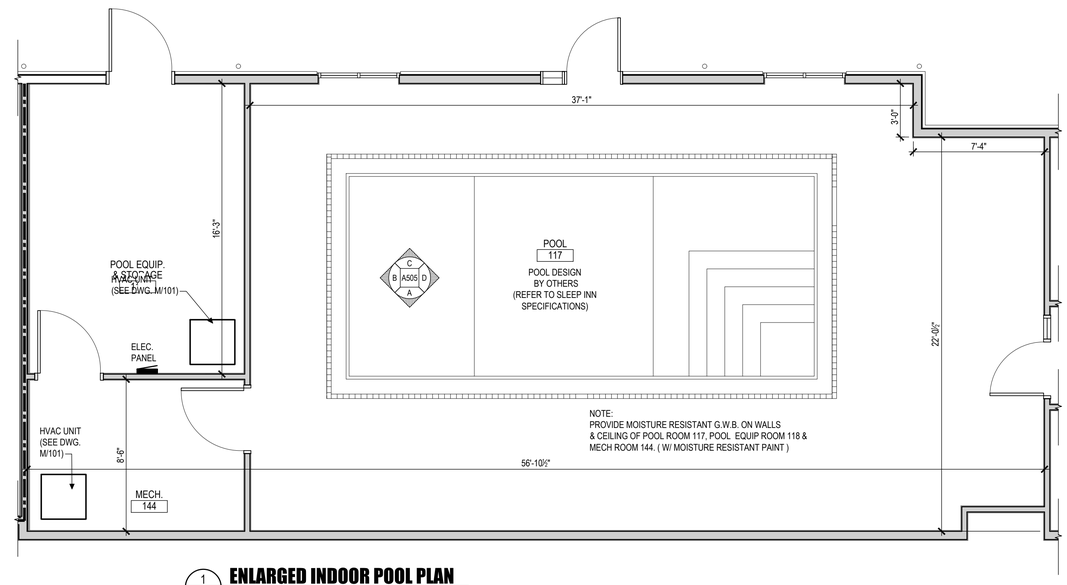

1 A505 **ENLARGED INDOOR POOL PLAN**
SCALE: 1/4"=1'-0"

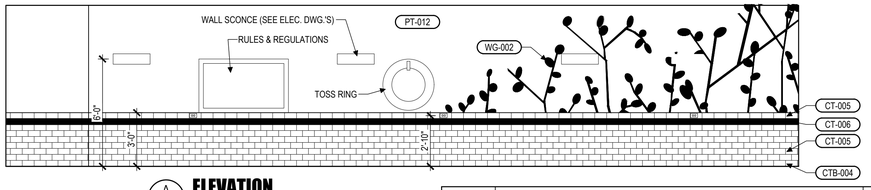

A A505 **ELEVATION**
SCALE: 1/4"=1'-0"

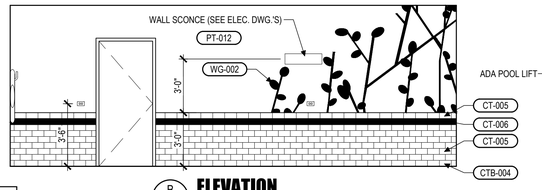

B A505 **ELEVATION**
SCALE: 1/4"=1'-0"

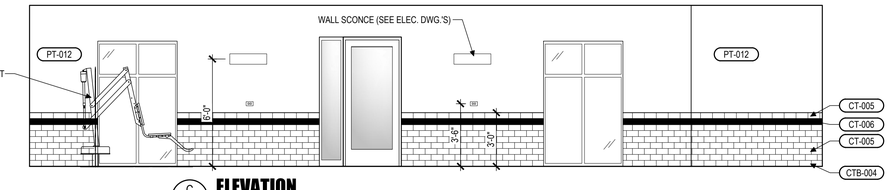

C A505 **ELEVATION**
SCALE: 1/4"=1'-0"

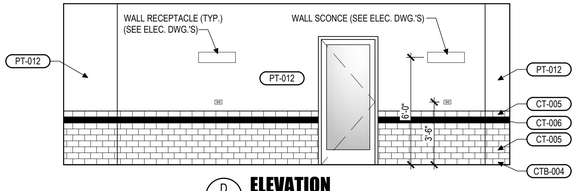

D A505 **ELEVATION**
SCALE: 1/4"=1'-0"

INTERIOR FINISH NOTE(S)

1. SEE A500 FOR COMPLETE FINISH SCHEDULE.
2. SEE TYPICAL ROOM BLOW-UPS & LOBBY BLOW-UP FOR MORE FINISH & EQUIPMENT DETAILS (SEE A500 DRAWINGS).
3. SEE A501 FOR FURNITURE SCHEDULE.
4. SEE E301 FOR GUEST ROOM ELECTRICAL PLANS.
5. SEE DWG(s) A601, A602, AND A 603 FOR CEILING HEIGHTS

FINAL DRAWINGS

HEX 9 ARCHITECTS
An LLC Company
5427 Woodside Drive
Gap, PA 17527
(717) 442-9094
(717) 283-0097 fx
JOSEPH TURNOWCHYK, AIA, NCARB
STATE OF
NEW YORK
REGISTRATION #
036357-1

ALL CONTRACTORS ARE TO VERIFY ALL DIMENSIONS, FIELD CONDITIONS AND THE WORK OF OTHER TRADES BEFORE PROCEEDING WITH THEIR WORK.

This drawing is the exclusive property of HEX 9 ARCHITECTS and may not be reproduced in any form without written authorization from HEX 9 ARCHITECTS. Unauthorized reproduction or use of any or all parts of this drawing will constitute a violation of U.S. copyright laws.
COPYRIGHT © 2018 HEX 9 ARCHITECTS ALL RIGHTS RESERVED

REVISIONS

NUMBER	DATE	REVISED BY

DATE FEBRUARY 6, 2018
DRAWN BY CMT
PROJECT NUMBER 16114

NEW FACILITY FOR:
SLEEP INN & SUITES CHOICE PROPERTY I.D. # NY701
635 ELMIRA ROAD
ITHACA, NEW YORK 14850

POOL ROOM PLANS

A505
DRAWING NUMBER

D:\9-9314 SLEEP INN, ITHACA, NY\PRODUCTION\ASSI\POOL PLANS.DWG 09-01-18 1:08 AM PRINTED BY: USER06

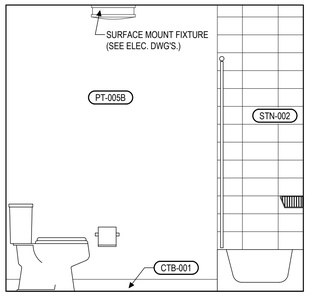

TYP. QUEEN BATHROOM ELEV.

A A506 — SCALE: 1/2"=1'-0"

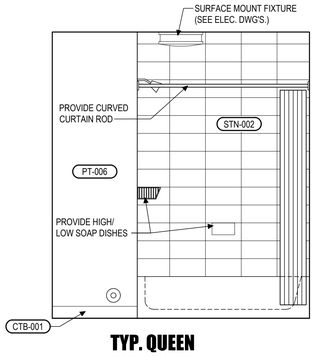

TYP. QUEEN BATHROOM ELEV.

B A506 — SCALE: 1/2"=1'-0"

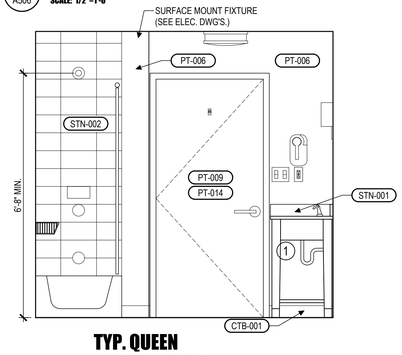

TYP. QUEEN BATHROOM ELEV.

C A506 — SCALE: 1/2"=1'-0"

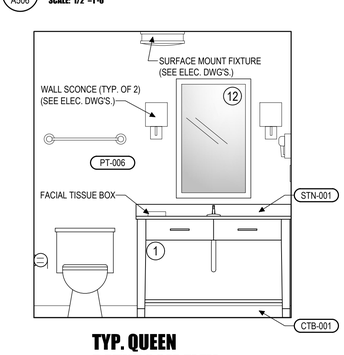

TYP. QUEEN BATHROOM ELEV.

D A506 — SCALE: 1/2"=1'-0"

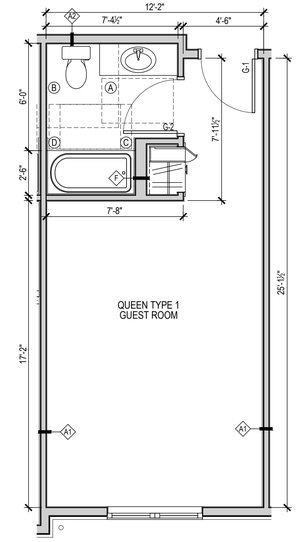

ENLARGED QUEEN TYPE 1 FLOOR PLAN

1 A506 — SCALE: 1/4"=1'-0"

ROOMS: 105, 107, 205, 213, 221, 227, 305, 313, 321

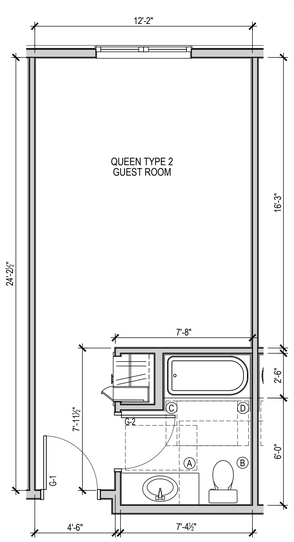

ENLARGED QUEEN TYPE 2 FLOOR PLAN

2 A506 — SCALE: 1/4"=1'-0"

ROOMS: 206,222, 224, 302, 304, 306, 308, 322, 324

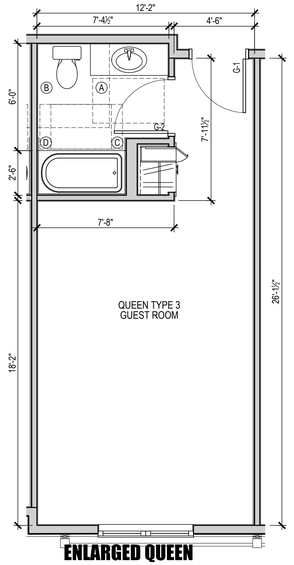

ENLARGED QUEEN TYPE 3 FLOOR PLAN

3 A506 — SCALE: 1/4"=1'-0"

ROOMS: 201, 203, 209, 219, 301, 303, 309, 317, 325

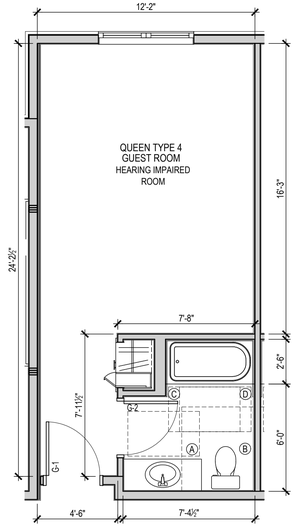

ENLARGED QUEEN TYPE 4 FLOOR PLAN

4 A506 — SCALE: 1/4"=1'-0"

ROOMS: 102, 202,204

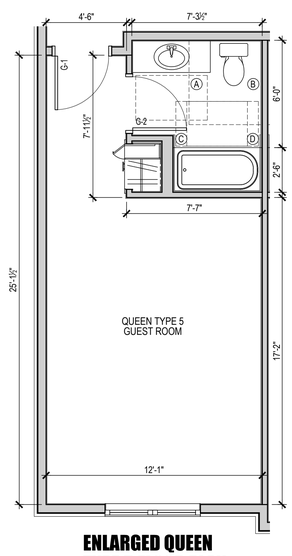

ENLARGED QUEEN TYPE 5 FLOOR PLAN

5 A506 — SCALE: 1/4"=1'-0"

ROOMS: 100, 200, 300

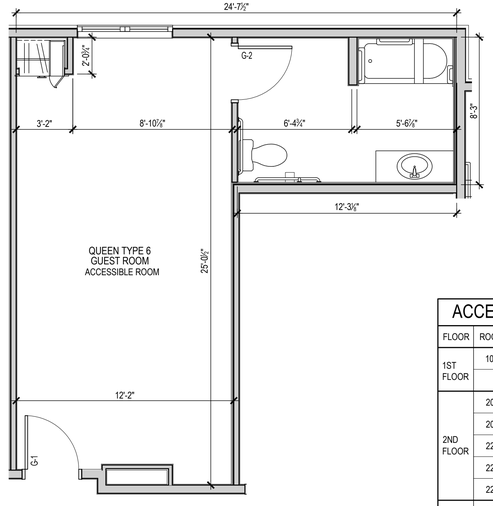

ENLARGED QUEEN TYPE 6 FLOOR PLAN

6 A506 — SCALE: 1/4"=1'-0"

ROOM 326

ACCESSIBLE GUEST ROOMS

FLOOR	ROOM #	ROOM TYPE	DESCRIPTION
1ST FLOOR	102	QUEEN	HEARING IMPAIRED
2ND FLOOR	202	QUEEN	HEARING IMPAIRED
	204	QUEEN	HEARING IMPAIRED
	223	KING	H/C ACCESSIBLE W/ ROLL IN SHOWER
	225	KING SUITE	HEARING IMPAIRED
	226	KING SUITE	H/C ACCESSIBLE
3RD FLOOR	307	KING SUITE	HEARING IMPAIRED
	314	KING	HEARING IMPAIRED
	323	KING	H/C ACCESSIBLE & HEARING IMPAIRED
	326	QUEEN	H/C ACCESSIBLE

GUEST ROOMS MIX

FLOOR	QUEEN	KING	KING SUITE	KING JACUZZI
1ST FLOOR	4	3	0	3
2ND FLOOR	14	12	4	0
3RD FLOOR	16	10	4	0
TOTALS:	34	25	8	3

70 ROOMS TOTAL

NOTE: SEE ACCESSIBLE GUEST ROOM CHART FOR LOCATIONS

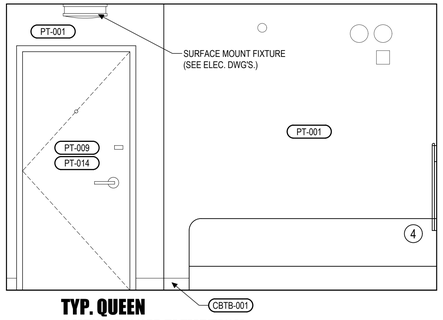

TYP. QUEEN GUEST ROOM ELEVATION

E A506 — SCALE: 1/2"=1'-0"

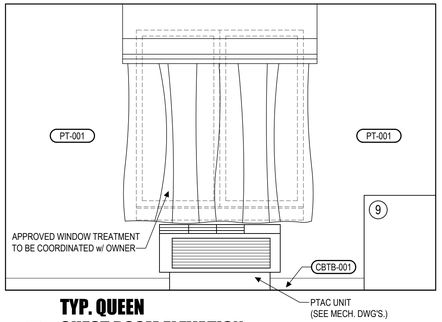

TYP. QUEEN GUEST ROOM ELEVATION

F A506 — SCALE: 1/2"=1'-0"

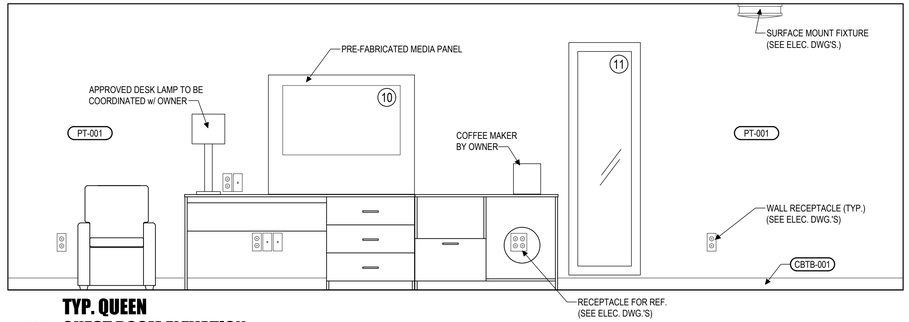

TYP. QUEEN GUEST ROOM ELEVATION

G A506 — SCALE: 1/2"=1'-0"

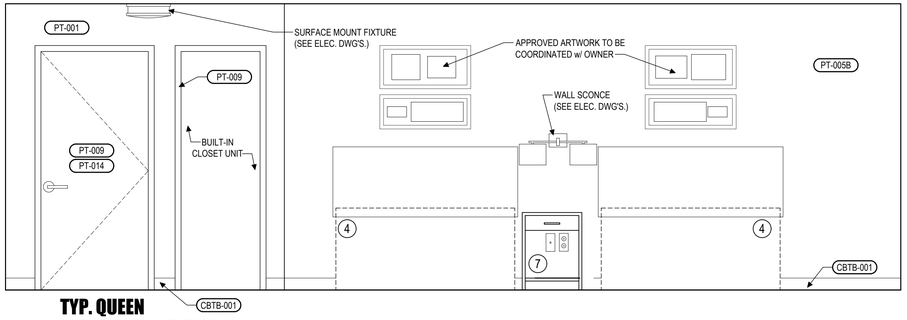

TYP. QUEEN GUEST ROOM ELEVATION

H A506 — SCALE: 1/2"=1'-0"

HANDICAP CLEARANCE LEGEND TYPE 'B' UNITS - ANSI 1004

MARK	DESCRIPTION
A	DENOTES 30"x48" CLEAR FLOOR SPACE FOR VANITY (ANSI SECTION 1004.11.3.1)
B	DENOTES 48"x66" CLEAR FLOOR SPACE FOR TOILET
C	DENOTES 30"x60" CLEAR FLOOR SPACE FOR TUB
D	DENOTES 30"x48" CLEAR FLOOR SPACE (BEYOND ARC OF DOOR SWING) TO ALLOW DOOR TO SWING INTO BATHROOM (ANSI 1004.11.2.1)

PROVIDE BLOCKING FOR ALL FUTURE GRAB BARS
SEE DWGS. 6/A508 & 7/A508

INTERIOR FINISH NOTE(S)

1. SEE A500 FOR COMPLETE FINISH SCHEDULE.
2. SEE TYPICAL ROOM BLOW-UPS & LOBBY BLOW-UP FOR MORE FINISH & EQUIPMENT DETAILS (SEE A500 DRAWINGS).
3. SEE A501 FOR FURNITURE SCHEDULE.
4. SEE E301 FOR GUEST ROOM ELECTRICAL PLANS.
5. SEE DWG(S) A601, A602, AND A 603 FOR CEILING HEIGHTS
6. SEE A402 FOR MANEUVERING CLEARANCES AT MANUAL SWINGING DOORS.
7. SEE 8/A402 FOR IDENTIFICATION SIGN ELEVATIONS.

FINAL DRAWINGS

HEX 9 ARCHITECTS
5427 Woodside Drive
Gap, PA 17527
(717) 442-9034
(717) 283-0097 fx
An LLC Company
JOSEPH TURNOWCHYK, AIA, NCARB

STATE OF
NEW YORK
REGISTRATION #
036357-1

ALL CONTRACTORS ARE TO VERIFY ALL DIMENSIONS, FIELD CONDITIONS AND THE WORK OF OTHER TRADES BEFORE PROCEEDING WITH THEIR WORK.

This drawing is the exclusive property of HEX 9 ARCHITECTS and may not be reproduced in any form without written authorization from HEX 9 ARCHITECTS. Unauthorized reproduction or use of any or all parts of this drawing will constitute a violation of U.S. copyright laws.

COPYRIGHT © 2018 HEX 9 ARCHITECTS ALL RIGHTS RESERVED

REVISIONS

NUMBER	DATE	REVISED BY

DATE FEBRUARY 6, 2018
DRAWN BY CMT
PROJECT NUMBER 16114

NEW FACILITY FOR:
SLEEP INN & SUITES
635 ELMIRA ROAD
ITHACA, NEW YORK 14850
CHOICE PROPERTY I.D. # NY701

QUEEN ROOM PLANS AND INTERIOR ELEVATIONS

A506
DRAWING NUMBER

I:\2016\16114-SLEEP INN - ITHACA, NY\PRODUCTION\ARCH\DETAILS.DWG 9-5-18 9:40 AM PRINTED BY: JSE/RC

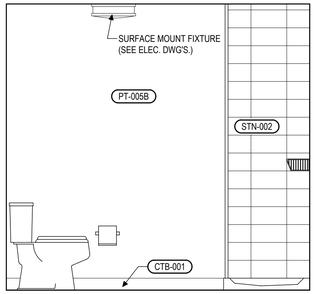

TYP. KING / KING SUITE BATHROOM ELEVATION

A A507 — SCALE: 1/2"=1'-0"

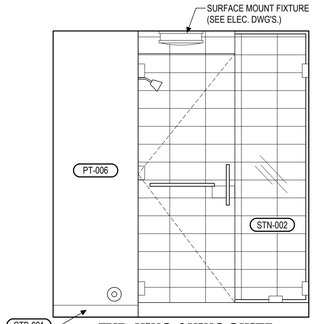

TYP. KING / KING SUITE BATHROOM ELEVATION

B A507 — SCALE: 1/2"=1'-0"

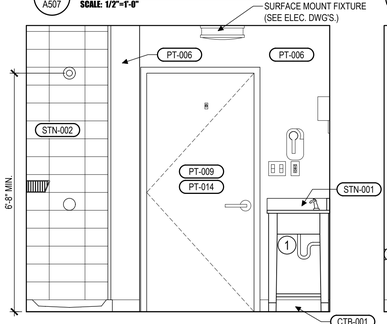

TYP. KING / KING SUITE BATHROOM ELEVATION

C A507 — SCALE: 1/2"=1'-0"

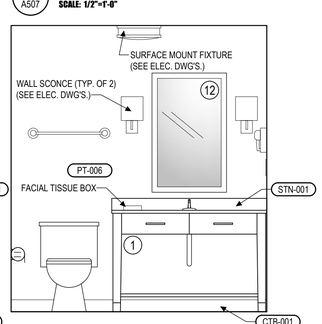

TYP. KING / KING SUITE BATHROOM ELEVATION

D A507 — SCALE: 1/2"=1'-0"

INTERIOR FINISH NOTE(S)

1. SEE A500 FOR COMPLETE FINISH SCHEDULE.
2. SEE TYPICAL ROOM BLOW-UPS & LOBBY BLOW-UP FOR MORE FINISH & EQUIPMENT DETAILS (SEE A500 DRAWINGS).
3. SEE A501 FOR FURNITURE SCHEDULE.
4. SEE E301 FOR GUEST ROOM ELECTRICAL PLANS.
5. SEE DWG(s) A601, A602, AND A 603 FOR CEILING HEIGHTS
6. SEE A402 FOR MANEUVERING CLEARANCES AT MANUAL SWINGING DOORS.
7. SEE 8/A402 FOR IDENTIFICATION SIGN ELEVATIONS

HANDICAP CLEARANCE LEGEND
TYPE 'B' UNITS - ANSI 1004

MARK	DESCRIPTION
A	DENOTES 30"x48" CLEAR FLOOR SPACE FOR VANITY (ANSI SECTION 1004.11.3.1)
B	DENOTES 48"x66" CLEAR FLOOR SPACE FOR TOILET
C	DENOTES 30"x60" CLEAR FLOOR SPACE FOR TUB
D	DENOTES 30"x48" CLEAR FLOOR SPACE (BEYOND ARC OF DOOR SWING) TO ALLOW DOOR TO SWING INTO BATHROOM (ANSI 1004.11.2.1)

PROVIDE BLOCKING FOR ALL FUTURE GRAB BARS
SEE DWGS. 6/A508 & 7/A508

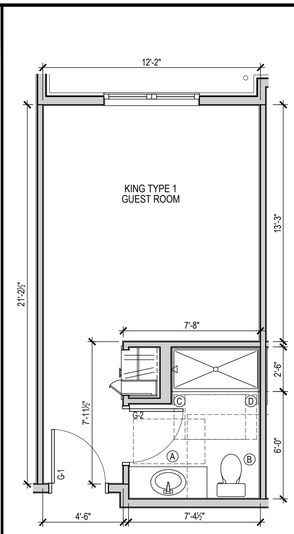

ENLARGED KING TYPE 1 FLOOR PLAN

1 A507 — SCALE: 1/4"=1'-0"

ROOMS: 210, 216, 218, 220, 310, 316, 318, 320

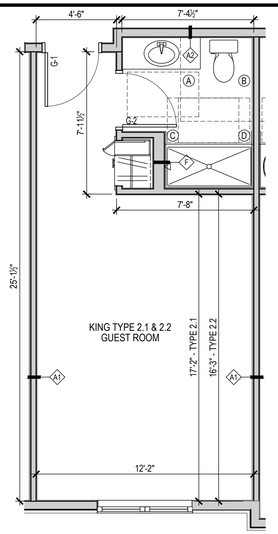

ENLARGED KING TYPE 2.1 & 2.2 FLOOR PLAN

2 A507 — SCALE: 1/4"=1'-0"

ROOM TYPE 2.1: 207, 228, 229, 327, 328, 329
ROOM TYPE 2.2: 104, 106, 108, 208

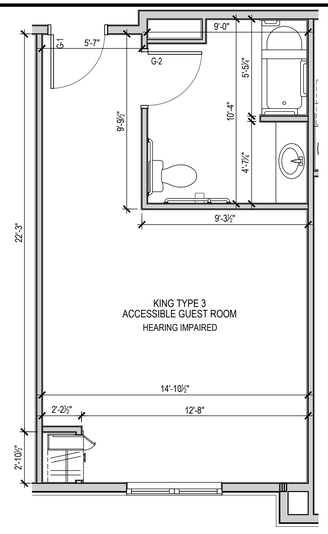

ENLARGED KING TYPE 3 FLOOR PLAN

3 A507 — SCALE: 1/4"=1'-0"

ROOMS: 223, 323

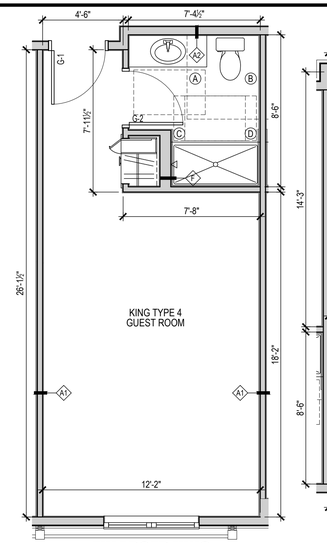

ENLARGED KING TYPE 4 FLOOR PLAN

4 A507 — SCALE: 1/4"=1'-0"

ROOM 211

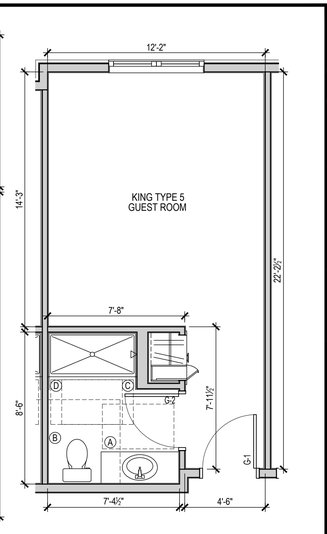

ENLARGED KING TYPE 5 FLOOR PLAN

5 A507 — SCALE: 1/4"=1'-0"

ROOMS: 212, 214, 312, 314

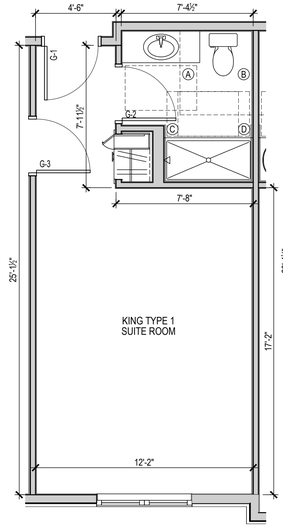

ENLARGED KING SUITE TYPE 1 FLOOR PLAN

6 A507 — SCALE: 1/4"=1'-0"

ROOMS: 215, 307, 315

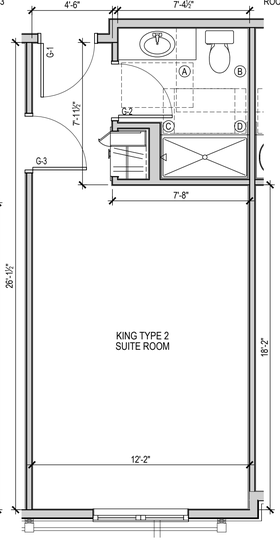

ENLARGED KING SUITE TYPE 2 FLOOR PLAN

7 A507 — SCALE: 1/4"=1'-0"

ROOMS: 217, 225, 311, 319

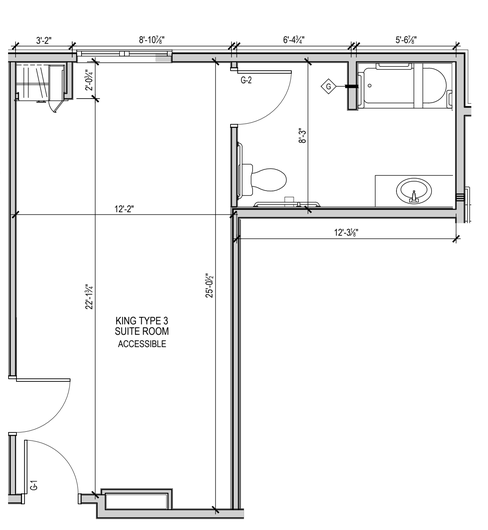

ENLARGED KING SUITE TYPE 3 FLOOR PLAN

8 A507 — SCALE: 1/4"=1'-0"

ROOM 226

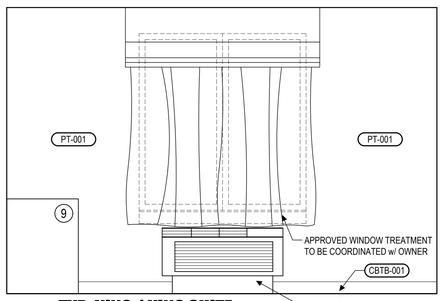

TYP. KING / KING SUITE GUEST ROOM ELEVATION

E A507 — SCALE: 1/2"=1'-0"

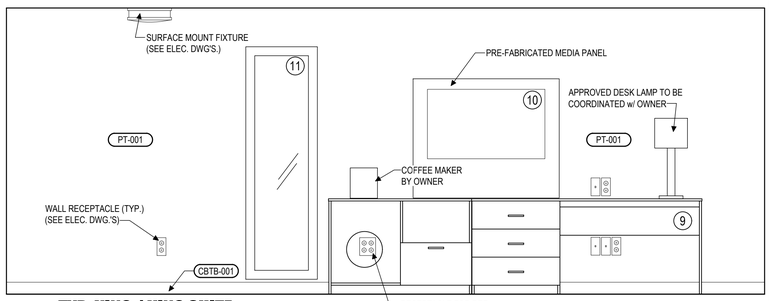

TYP. KING / KING SUITE GUEST ROOM ELEVATION

F A507 — SCALE: 1/2"=1'-0"

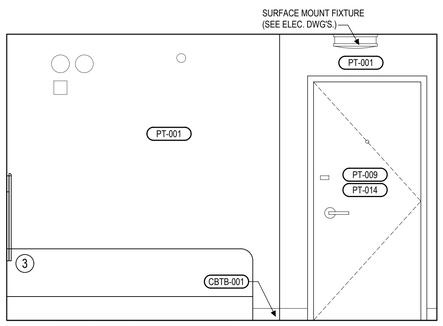

TYP. KING / KING SUITE GUEST ROOM ELEVATION

G A507 — SCALE: 1/2"=1'-0"

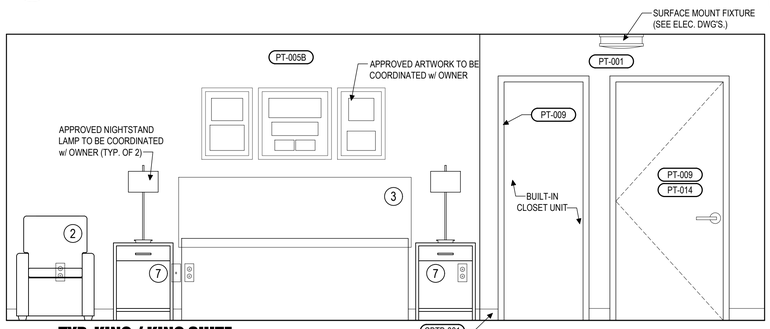

TYP. KING / KING SUITE GUEST ROOM ELEVATION

H A507 — SCALE: 1/2"=1'-0"

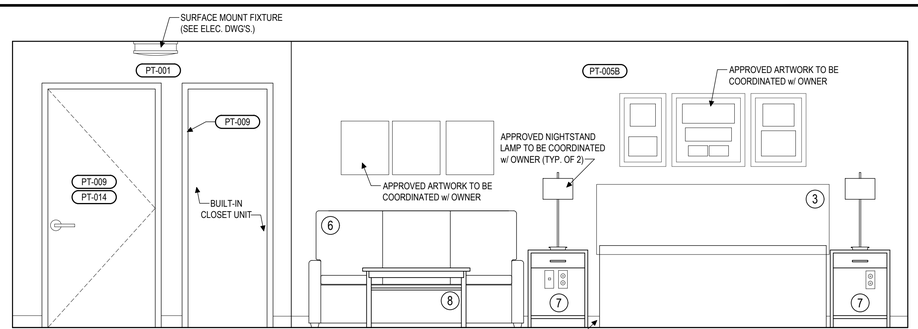

TYP. KING / KING SUITE GUEST ROOM ELEVATION

J A507 — SCALE: 1/2"=1'-0"

FINAL DRAWINGS

HEX 9 ARCHITECTS
An LLC Company
5427 Woodside Drive
Gap, PA 17527
(717) 442-9034
(717) 283-0097 fx
JOSEPH TURNOWCHYK, AIA, NCARB

STATE OF
NEW YORK
REGISTRATION #
036357-1

ALL CONTRACTORS ARE TO VERIFY ALL DIMENSIONS, FIELD CONDITIONS AND THE WORK OF OTHER TRADES BEFORE PROCEEDING WITH THEIR WORK.

This drawing is the exclusive property of HEX 9 ARCHITECTS and may not be reproduced in any form without written authorization from HEX 9 ARCHITECTS. Unauthorized reproduction or use of any or all parts of this drawing will constitute a violation of U.S. copyright laws.
COPYRIGHT © 2018 - HEX 9 ARCHITECTS - ALL RIGHTS RESERVED

REVISIONS

NUMBER	DATE	REVISED BY

DATE FEBRUARY 6, 2018
DRAWN BY CMT
PROJECT NUMBER 16114

NEW FACILITY FOR:
SLEEP INN & SUITES
635 ELMIRA ROAD
ITHACA, NEW YORK 14850
CHOICE PROPERTY I.D. # NY701

KING ROOM PLANS AND INTERIOR ELEVATIONS

A507
DRAWING NUMBER

I:\2016\16114 SLEEP INN, ITHACA, NY\PRODUCTION\ARCH\KING SUITE DETAILS.DWG 5/21/18 9:42 AM PRINTED BY: GEORGE

A.D.A. NOTES

THE GENERAL CONTRACTOR SHALL ACQUAINT HIMSELF WITH THE HANDICAP REQUIREMENTS FOR THE APPLICABLE STATES AND THE AMERICAN DISABILITIES ACT (A.D.A.) AND SHALL INSURE THAT THIS FACILITY WILL BE ACCESSIBLE. ACCORDING TO THE STRICTER REQUIREMENTS OF THE APPLICABLE STANDARDS. THE FOLLOWING IS A PARTIAL LIST OF REQUIREMENTS.

1. DOOR HARDWARE SHALL BE MOUNTED BETWEEN 36" AND 42" ABOVE FLOOR AND BE LEVER TYPE.
2. TOILETS:
   - A. LAVATORY TO HAVE LEVER HANDLES, SPRING FAUCETS OR SELF METERING FAUCETS.
   - B. A COAT HOOK 48" ABOVE THE FLOOR SHALL BE MOUNTED ON THE BACK SIDE OF THE HANDICAPPED STALL DOOR.
   - C. LOCATE THE WATER CLOSET 16"-18" FROM THE CENTER LINE OF THE FIXTURE TO THE WALL FINISH. THE SEAT WILL BE 17" TO 19" ABOVE THE FLOOR TO THE TOP OF SEAT.
   - D. PROVIDE ONE 42" LONG x 1½" OUTSIDE DIAMETER PEENED GRAB BAR 12" FROM THE BACK WALL 33"-36" TO TOP OF THE BAR PARALLEL TO AND ABOVE THE FLOOR. PROVIDE ONE 36" LONG x 1½" OUTSIDE DIAMETER PEENED GRAB BAR BEHIND THE TOILET, 1½" FROM THE WALL AT 6" FROM THE SIDE WALL. PROVIDE ONE VERTICAL 18" LONG x 1½" OUTSIDE DIAMETER PEENED GRAB BAR 39"-41" FROM THE BACK WALL AND 39"-41" A.F.F.
   - E. LAVATORY TO BE MOUNTED 34" (MAX.) ABOVE THE FINISHED FLOOR TO RIM WITH KNEE SPACE OF 30" IN WIDTH AND 27" IN CLEAR HEIGHT. (29" CLEAR UNDER FRONT EDGE)
   - F. INSTALL MIRROR 40" (MAX.) ABOVE THE FINISHED FLOOR (TO BOTTOM OF REFLECTIVE SURFACE) AND 72" TO TOP.
   - G. DISPENSERS TO BE MOUNTED A MAXIMUM OF 42" ABOVE THE FLOOR TO ALL OPERATING OR DISPENSING SLOTS (U.N.O.).
   - H. TOILET PAPER DISPENSERS BELOW GRAB BAR: 24" MIN. AND 42" MAX. FROM BACK WALL, 18" MIN. A.F.F. AND 1½" MIN. FROM BOTTOM OF HORIZONTAL GRAD BAR.
3. ANY NEW OR RELOCATED OPERATING COMPONENTS (SWITCHES, FIRE PULLS, THERMOSTATS, SECURITY ALARMS, FIRE EXTINGUISHERS, EMPLOYEE TIME CLOCK, ETC.) LOCATED ON WALLS, MUST BE 48" A.F.F. TO THE HIGHEST OPERATING BUTTON OR UNIT.
4. IF AN AREA OF REFUGE IS PROVIDED AT AN EXIT IT SHALL BE IDENTIFIED BY A SIGN WHICH STATES "AREA OF REFUGE" AND DISPLAYS THE INTERNATIONAL SYMBOL OF ACCESSIBILITY. THE SIGN SHALL BE ILLUMINATED WHEN EXIT SIGN ILLUMINATION IS REQUIRED. PROVIDE A TWO-WAY COMMUNICATION SYSTEM BETWEEN THE AREA OF REFUGE AND A CENTRAL POINT APPROVED BY THE BUILDING INSPECTOR.

HANDICAP CLEARANCE LEGEND

MARK	DESCRIPTION
H	DENOTES 30"x48" CLEAR FLOOR SPACE
J	DENOTES 56"x60" CLEAR FLOOR SPACE
K	DENOTES 60" DIA. CLEAR FLOOR SPACE
L	DENOTES 56"x48" CLEAR FLOOR SPACE FOR WATER CLOSET IN TYPE 'B' UNIT

NOTE:
1. FOR "A" THROUGH "G" REFER TO MANEUVERING CLEARANCE AT MANUAL SWINGING DOORS SCHEDULE.

TOILET/RESTROOM NOTES

1. PROVIDE ANY REQUIRED WOOD BLOCKING FOR ALL TOILET ACCESSORIES, HANDICAP HARDWARE, MECHANICAL, ELECTRICAL, PLUMBING ITEMS AND MILLWORK, WHERE REQUIRED.

INTERIOR FINISH NOTE(S)

1. SEE A500 FOR COMPLETE FINISH SCHEDULE.
2. SEE TYPICAL ROOM BLOW-UPS & LOBBY BLOW-UP FOR MORE FINISH & EQUIPMENT DETAILS (SEE A500 DRAWINGS).
3. SEE A501 FOR FURNITURE SCHEDULE.
4. SEE E301 FOR GUEST ROOM ELECTRICAL PLANS.
5. SEE DWG(s) A601, A602, AND A 603 FOR CEILING HEIGHTS
6. SEE A402 FOR MANEUVERING CLEARANCES AT MANUAL SWINGING DOORS.
7. SEE 8/A402 FOR IDENTIFICATION SIGN ELEVATIONS

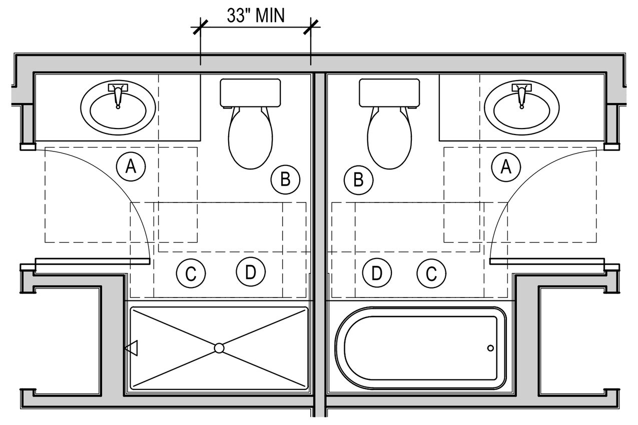

5 A508 TYP. TYPE 'B' UNIT BATHROOM PLANS
SCALE: 1/4"=1'-0"

HANDICAP CLEARANCE LEGEND TYPE 'B' UNITS - ANSI 1004

MARK	DESCRIPTION
A	DENOTES 30"x48" CLEAR FLOOR SPACE FOR VANITY (ANSI SECTION 1004.11.3.1)
B	DENOTES 48"x66" CLEAR FLOOR SPACE FOR TOILET
C	DENOTES 30"x60" CLEAR FLOOR SPACE FOR TUB
D	DENOTES 30"x48" CLEAR FLOOR SPACE (BEYOND ARC OF DOOR SWING) TO ALLOW DOOR TO SWING INTO BATHROOM (ANSI 1004.11.2.1)
PROVIDE BLOCKING FOR ALL FUTURE GRAB BARS SEE DWGS. 6/A508 & 7/A508	

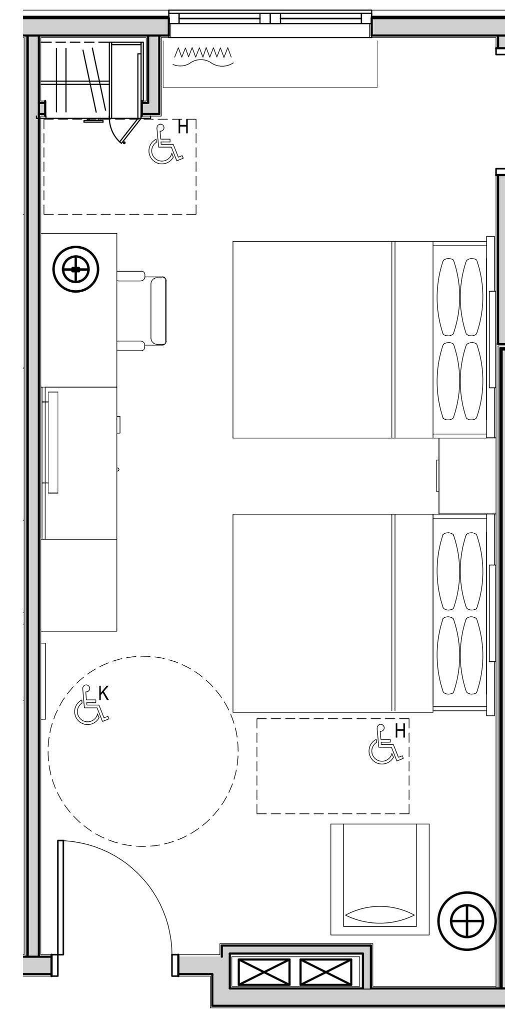

1 A508 ACCESSIBLE QUEEN ROOM PLAN
SCALE: 1/4"=1'-0"

NOTES:
1. REFER TO FLOOR PLAN (A401) FOR INDICATED WALL, WINDOW & DOOR TYPES.
2. SEE ELEVATIONS FOR CLEARANCES & MOUNTING HEIGHTS.
3. DIMENSIONS ARE SHOWN TO FINISHED SURFACES UNLESS OTHERWISE NOTED.
4. SEE FIXTURE SCHEDULE ON PLUMBING DRAWINGS.

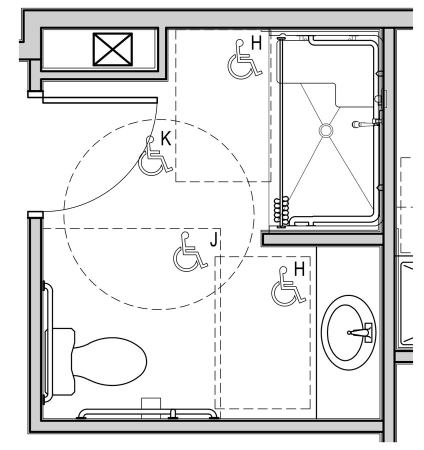

2 A508 ROLL-INN ACCESSIBLE BATHROOM PLAN
SCALE: 1/4"=1'-0"

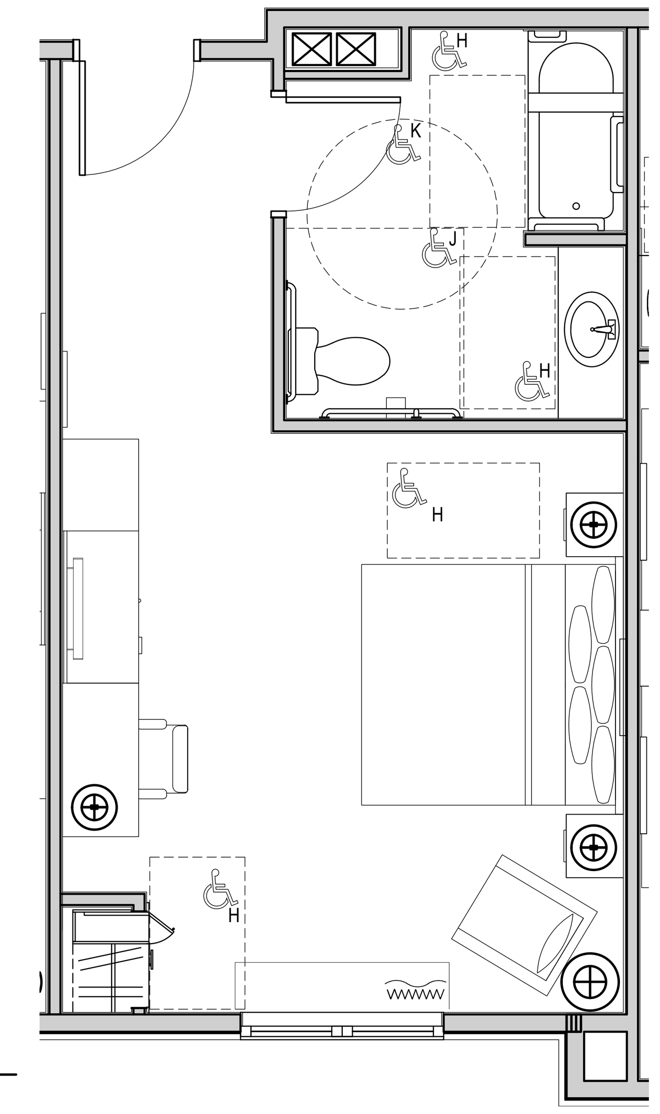

3 A508 TYP. ACCESSIBLE KING ROOM PLAN
SCALE: 1/4"=1'-0"

NOTES:
1. REFER TO FLOOR PLAN (A401) FOR INDICATED WALL, WINDOW & DOOR TYPES.
2. SEE ELEVATIONS FOR CLEARANCES & MOUNTING HEIGHTS.
3. DIMENSIONS ARE SHOWN TO FINISHED SURFACES UNLESS OTHERWISE NOTED.
4. SEE FIXTURE SCHEDULE ON PLUMBING DRAWINGS.

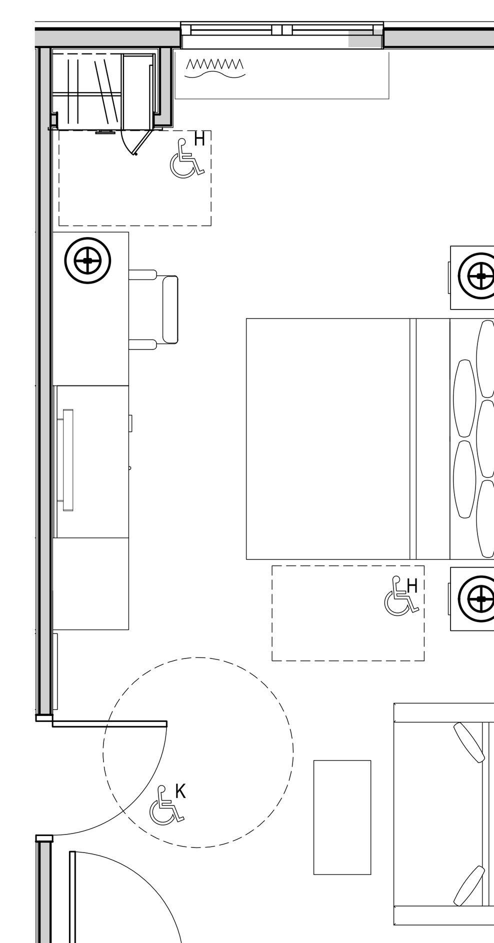

4 A508 ACCESSIBLE KING SUITE PLAN
SCALE: 1/4"=1'-0"

NOTES:
1. REFER TO FLOOR PLAN (A401) FOR INDICATED WALL, WINDOW & DOOR TYPES.
2. SEE ELEVATIONS FOR CLEARANCES & MOUNTING HEIGHTS.
3. DIMENSIONS ARE SHOWN TO FINISHED SURFACES UNLESS OTHERWISE NOTED.
4. SEE FIXTURE SCHEDULE ON PLUMBING DRAWINGS.

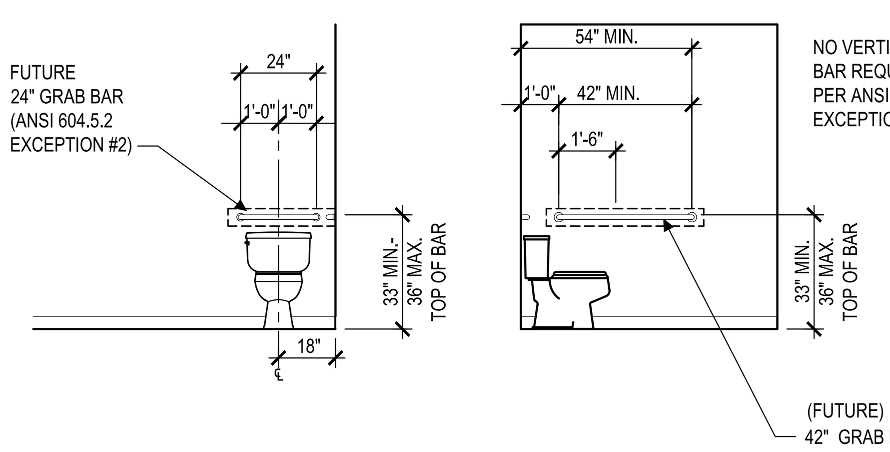

6 A508 TYP. TOILET ELEVATION - TYPE 'B' UNIT
SCALE: 1/4"=1'-0"

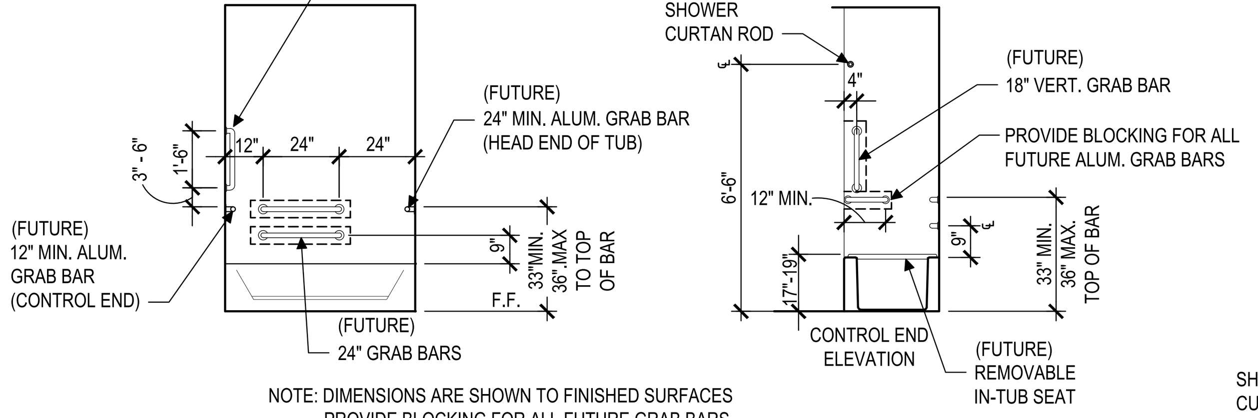

7 A508 BATHTUB ELEVATION - TYPE 'B' UNIT
SCALE: 1/4"=1'-0"

NOTE: PROVIDE BLOCKING IN WALLS TO PROVIDE FUTURE GRAB BARS FOR ALL SUITE BATHROOMS

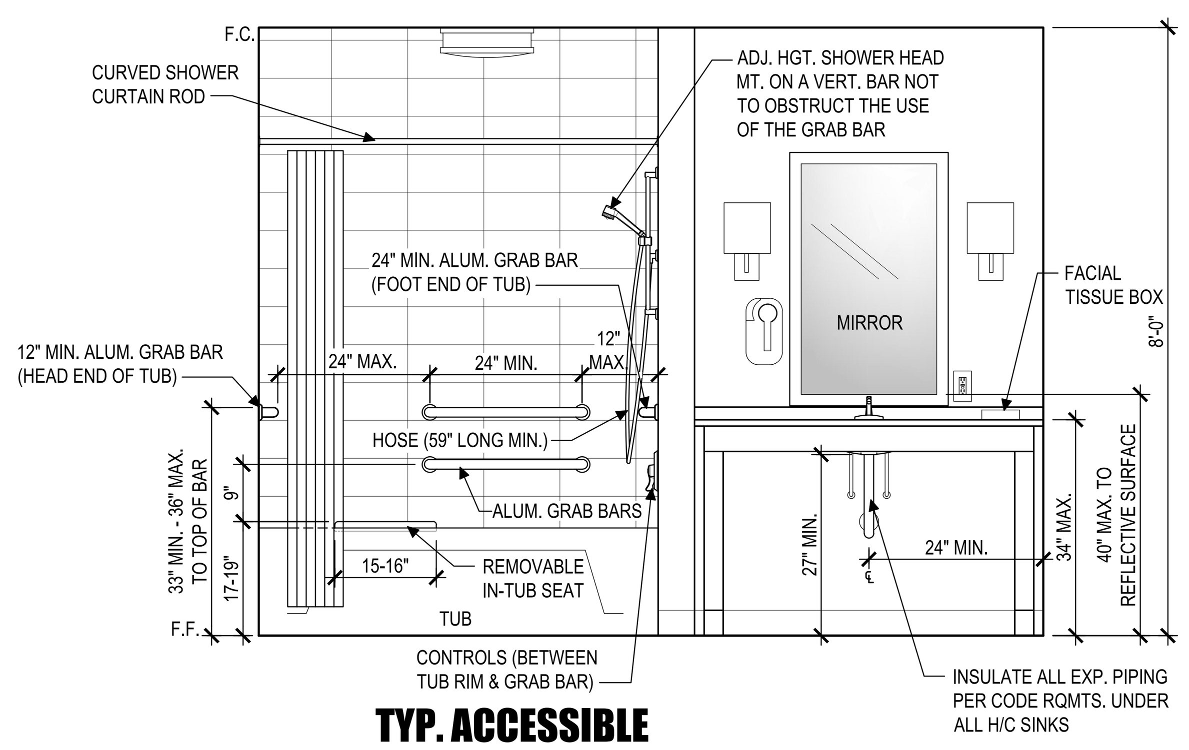

A A508 TYP. ACCESSIBLE BATHROOM ELEV.
SCALE: 1/2"=1'-0"

NOTE: DIMENSIONS ARE SHOWN TO FINISHED SURFACES

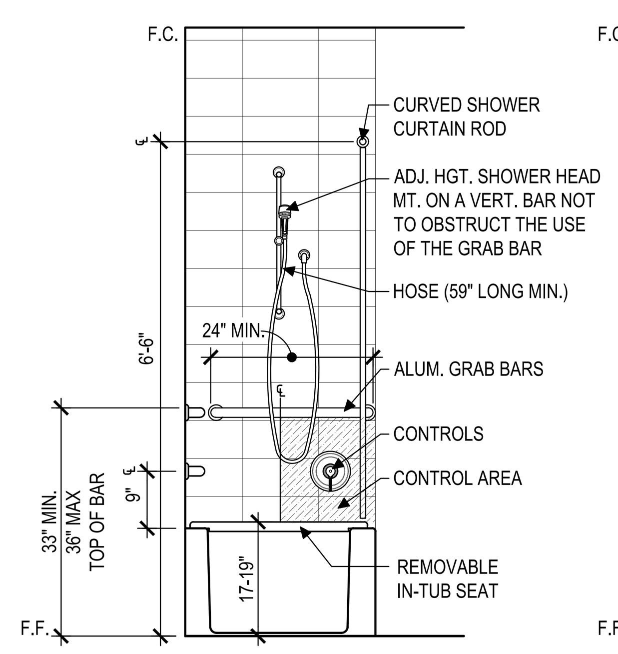

B A508 TYP. ACCESSIBLE BATH TUB ELEV.
SCALE: 1/2"=1'-0"

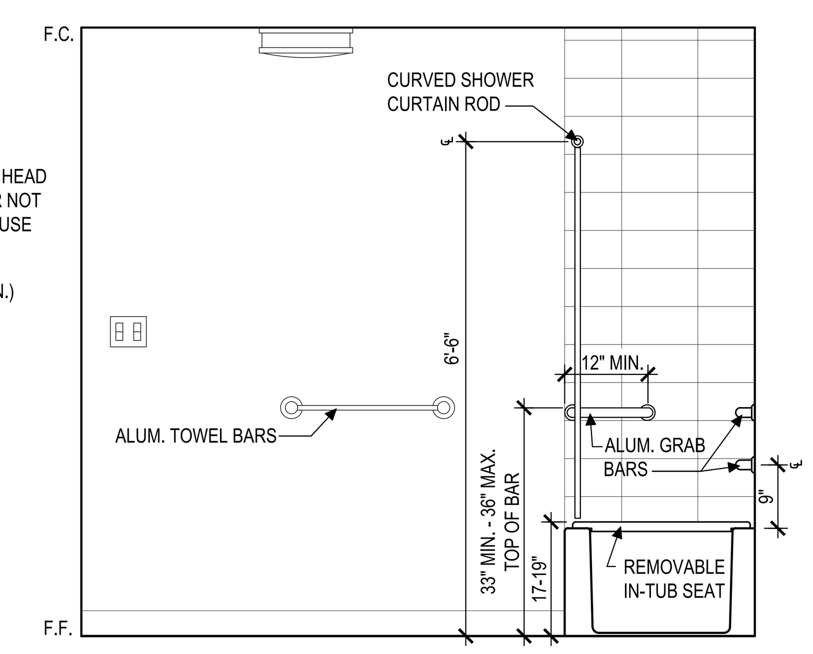

C A508 TYP. ACCESSIBLE BATHROOM ELEV.
SCALE: 1/2"=1'-0"

NOTE: DIMENSIONS ARE SHOWN TO FINISHED SURFACES

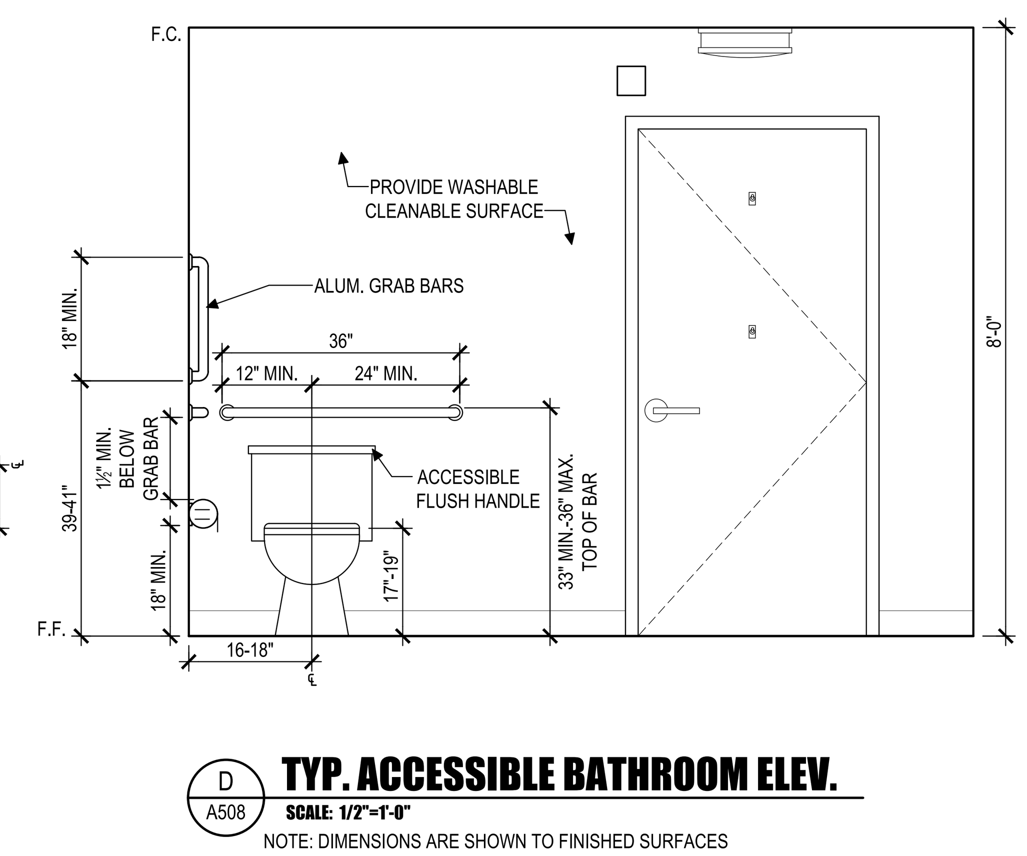

D A508 TYP. ACCESSIBLE BATHROOM ELEV.
SCALE: 1/2"=1'-0"

NOTE: DIMENSIONS ARE SHOWN TO FINISHED SURFACES

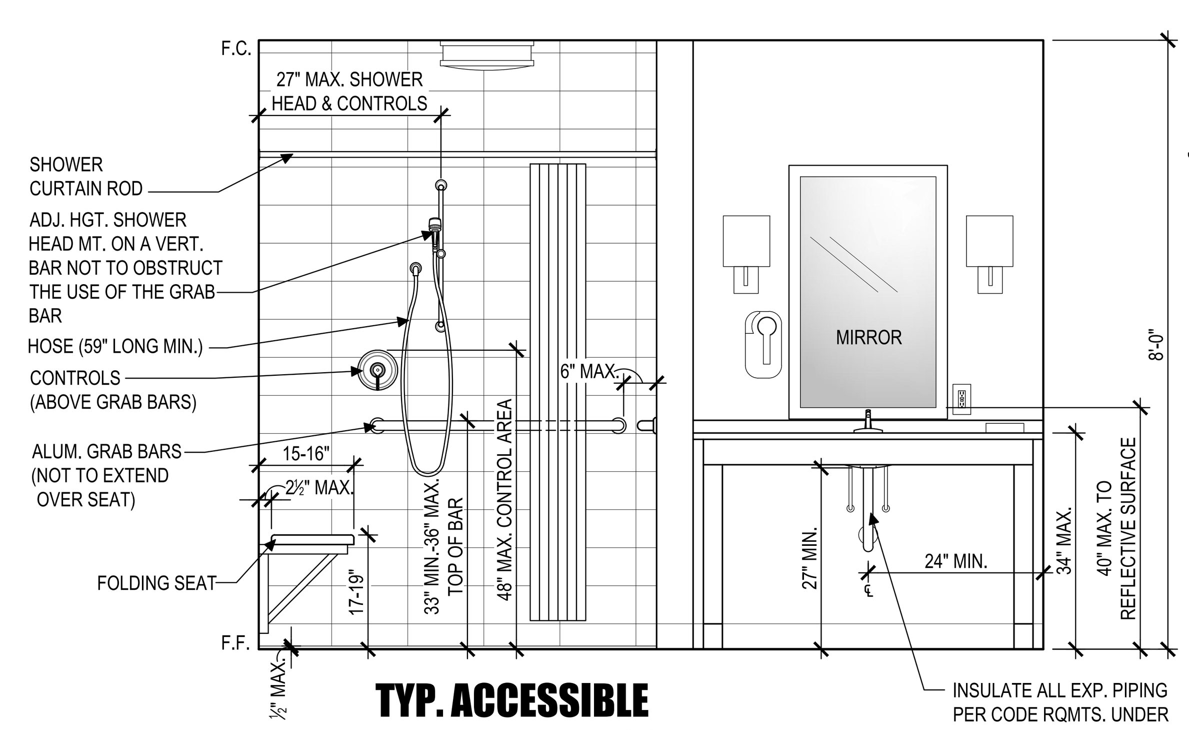

E A508 TYP. ACCESSIBLE ROLL-IN BATHROOM ELEV.
SCALE: 1/2"=1'-0"

NOTE: DIMENSIONS ARE SHOWN TO FINISHED SURFACES

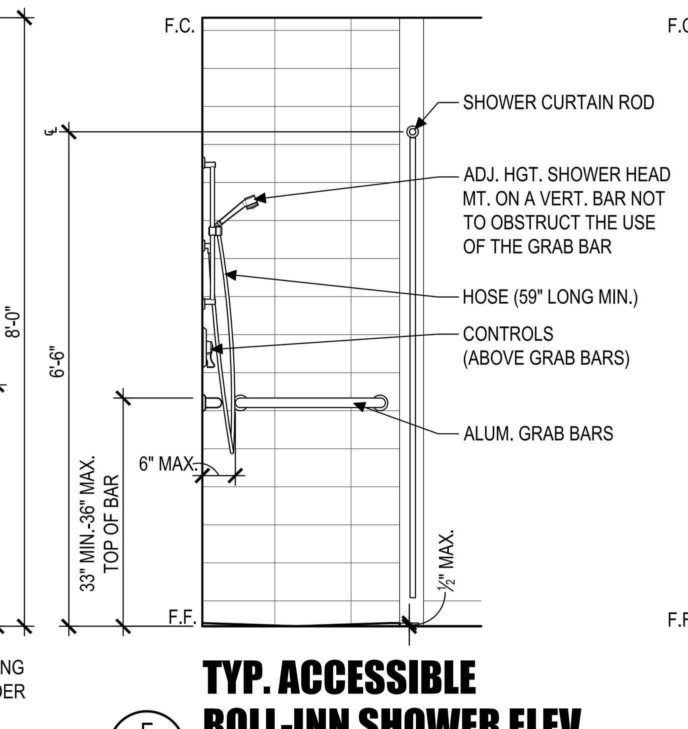

F A508 TYP. ACCESSIBLE ROLL-INN SHOWER ELEV.
SCALE: 1/2"=1'-0"

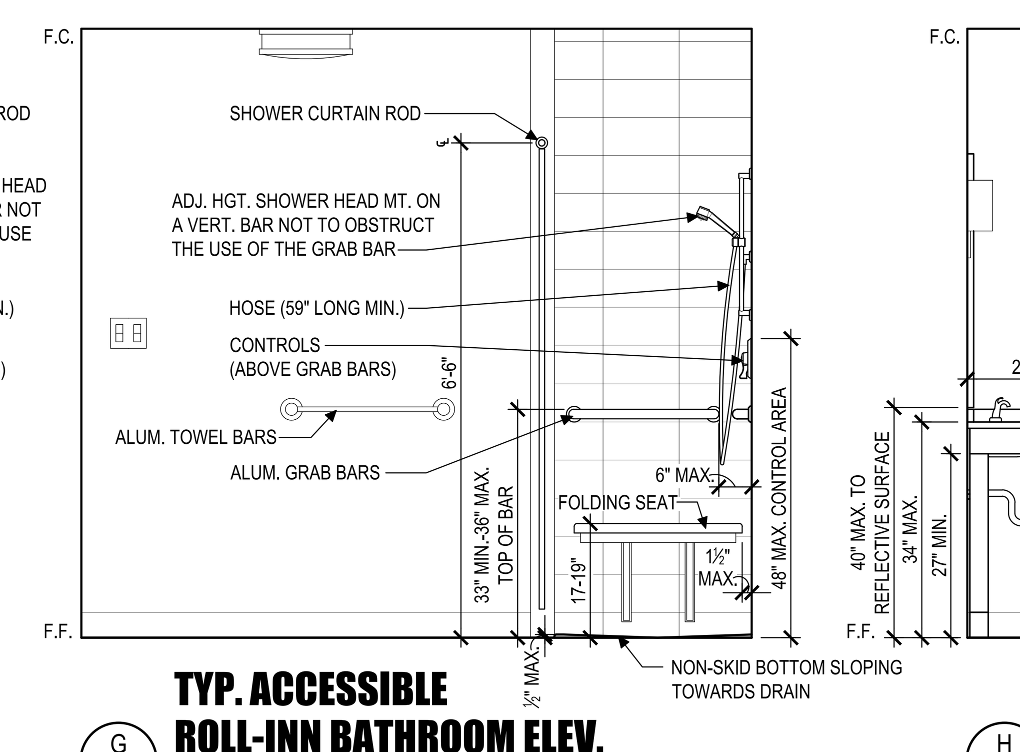

G A508 TYP. ACCESSIBLE ROLL-INN BATHROOM ELEV.
SCALE: 1/2"=1'-0"

NOTE: DIMENSIONS ARE SHOWN TO FINISHED SURFACES

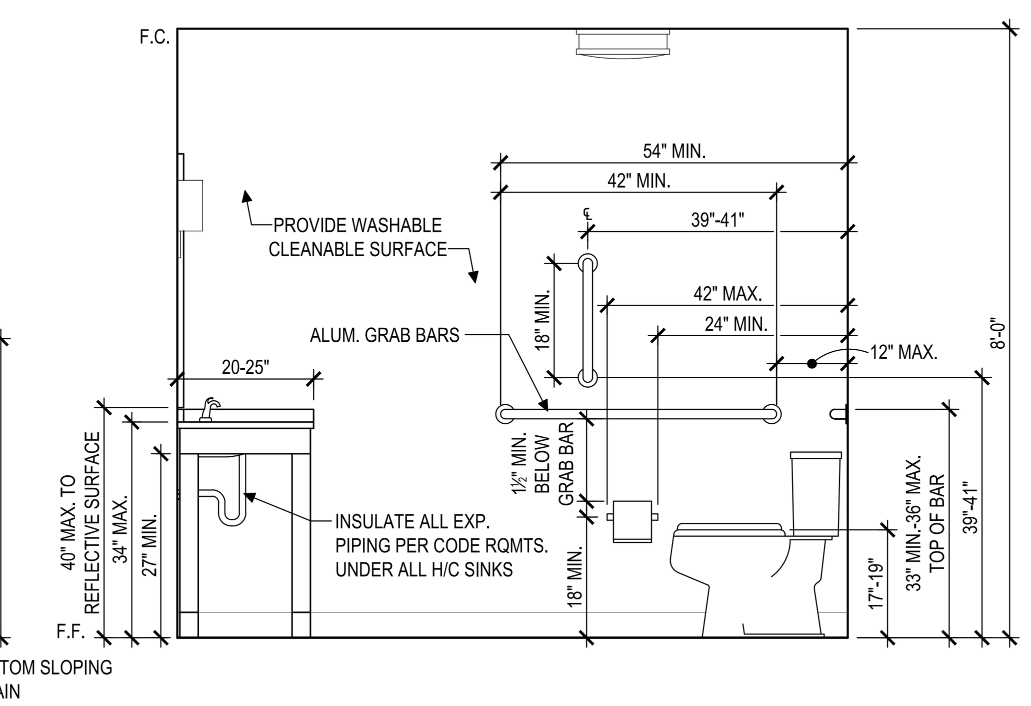

H A508 TYP. ACCESSIBLE BATHROOM ELEV.
SCALE: 1/2"=1'-0"

NOTE: DIMENSIONS ARE SHOWN TO FINISHED SURFACES

FINAL DRAWINGS

HEX 9 ARCHITECTS — ARCHITECTURE PLANNING
An LLC Company
5427 Woodside Drive
Gap, PA 17527
(717) 442-9034
(717) 283-0097 fx
JOSEPH TURNOWCHYK, AIA, NCARB

STATE OF NEW YORK REGISTRATION # 036357-1

ALL CONTRACTORS ARE TO VERIFY ALL DIMENSIONS, FIELD CONDITIONS AND THE WORK OF OTHER TRADES BEFORE PROCEEDING WITH THEIR WORK.

This drawing is the exclusive property of HEX 9 ARCHITECTS and may not be reproduced in any form without written authorization from HEX 9 ARCHITECTS. Unauthorized reproduction or use of any or all parts of this drawing will constitute a violation of U.S. copyright laws.

COPYRIGHT © 2018 HEX 9 ARCHITECTS ALL RIGHTS RESERVED

REVISIONS

NUMBER	DATE	REVISED BY

DATE	FEBRUARY 6, 2018
DRAWN BY	CMT
PROJECT NUMBER	16114

NEW FACILITY FOR:
SLEEP INN & SUITES
CHOICE PROPERTY I.D. # NY701
635 ELMIRA ROAD
ITHACA, NEW YORK 14850

ACCESSIBLE KING AND QUEEN ROOM PLANS AND ELEVATIONS

A508
DRAWING NUMBER

I:\2016\16114 SLEEP INN - ITHACA, NY\PRODUCTION\A508 ADA ROOM DETAILS.DWG 05-31-18 9:40 AM PRINTED BY: USER06

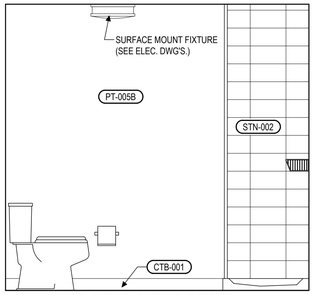

TYP. KING / KING SUITE BATHROOM ELEVATION

A A509 — SCALE: 1/2"=1'-0"

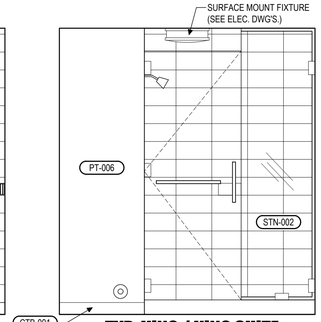

TYP. KING / KING SUITE BATHROOM ELEVATION

B A509 — SCALE: 1/2"=1'-0"

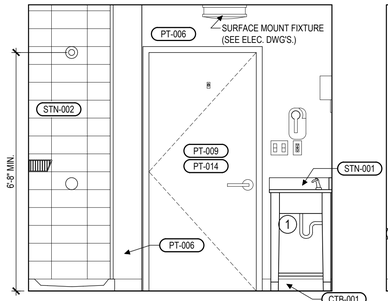

TYP. KING / KING SUITE BATHROOM ELEVATION

C A509 — SCALE: 1/2"=1'-0"

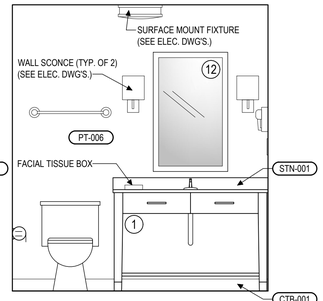

TYP. KING / KING SUITE BATHROOM ELEVATION

D A509 — SCALE: 1/2"=1'-0"

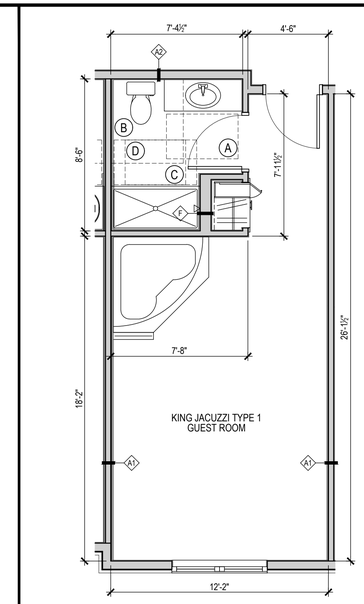

ENLARGED KING JACUZZI TYPE 1 FLOOR PLAN

1 A509 — SCALE: 1/4"=1'-0"

ROOMS: 101, 103, 109

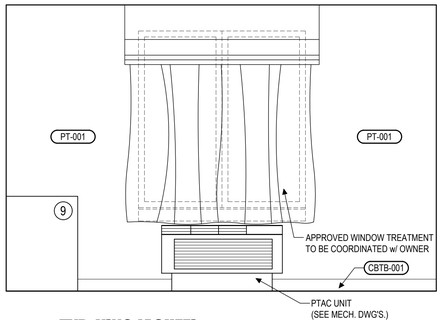

TYP. KING JACUZZI GUEST ROOM ELEVATION

E A509 — SCALE: 1/2"=1'-0"

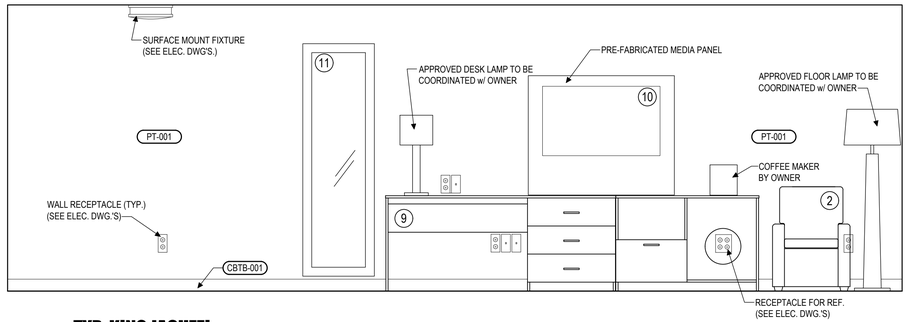

TYP. KING JACUZZI GUEST ROOM ELEVATION

F A509 — SCALE: 1/2"=1'-0"

HANDICAP CLEARANCE LEGEND TYPE 'B' UNITS - ANSI 1004	
MARK	DESCRIPTION
A	DENOTES 30"x48" CLEAR FLOOR SPACE FOR VANITY (ANSI SECTION 1004.11.3.1)
B	DENOTES 48"x66" CLEAR FLOOR SPACE FOR TOILET
C	DENOTES 30"x60" CLEAR FLOOR SPACE FOR TUB
D	DENOTES 30"x48" CLEAR FLOOR SPACE (BEYOND ARC OF DOOR SWING) TO ALLOW DOOR TO SWING INTO BATHROOM (ANSI 1004.11.2.1)
PROVIDE BLOCKING FOR ALL FUTURE GRAB BARS SEE DWGS. 8/A508 & 7/A508	

INTERIOR FINISH NOTE(S)

1. SEE A500 FOR COMPLETE FINISH SCHEDULE.
2. SEE TYPICAL ROOM BLOW-UPS & LOBBY BLOW-UP FOR MORE FINISH & EQUIPMENT DETAILS (SEE A500 DRAWINGS).
3. SEE A501 FOR FURNITURE SCHEDULE.
4. SEE E301 FOR GUEST ROOM ELECTRICAL PLANS.
5. SEE DWG(s) A601, A602, AND A 603 FOR CEILING HEIGHTS
6. SEE A402 FOR MANEUVERING CLEARANCES AT MANUAL SWINGING DOORS.
7. SEE 8/A402 FOR IDENTIFICATION SIGN ELEVATIONS

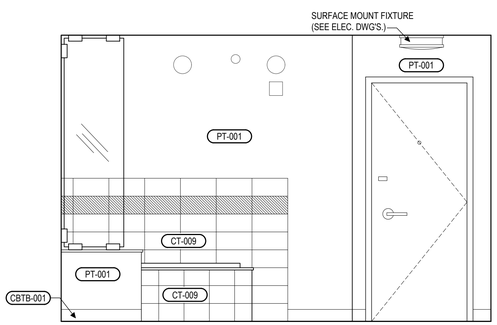

TYP. KING JACUZZI GUEST ROOM ELEVATION

G A509 — SCALE: 1/2"=1'-0"

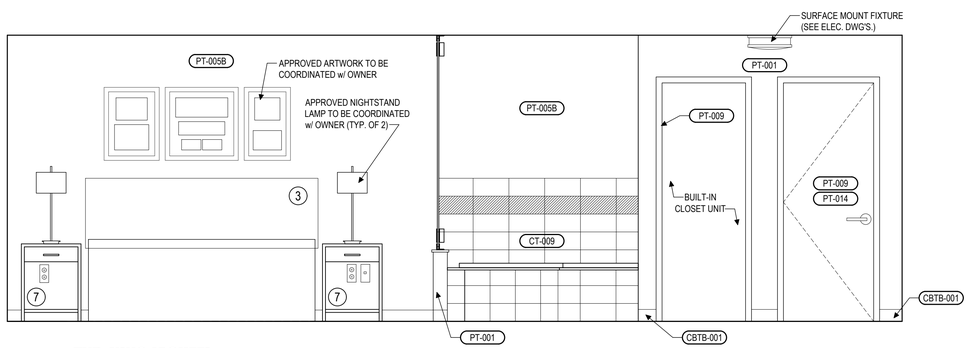

TYP. KING JACUZZI GUEST ROOM ELEVATION

H A509 — SCALE: 1/2"=1'-0"

FINAL DRAWINGS

HEX 9 ARCHITECTS
5427 Woodside Drive
Gap, PA 17527
(717) 442-9094
(717) 283-0097 fx
An LLC Company
JOSEPH TURNOWCHYK, AIA, NCARB

STATE OF
NEW YORK
REGISTRATION #
036357-1

ALL CONTRACTORS ARE TO VERIFY ALL DIMENSIONS, FIELD CONDITIONS AND THE WORK OF OTHER TRADES BEFORE PROCEEDING WITH THEIR WORK.

This drawing is the exclusive property of HEX 9 ARCHITECTS and may not be reproduced in any form without written authorization from HEX 9 ARCHITECTS. Unauthorized reproduction or use of any or all parts of this drawing will constitute a violation of U.S. copyright laws.

COPYRIGHT © 2018 HEX 9 ARCHITECTS ALL RIGHTS RESERVED

REVISIONS

NUMBER	DATE	REVISED BY

DATE FEBRUARY 6, 2018
DRAWN BY CMT
PROJECT NUMBER 16114

NEW FACILITY FOR:
SLEEP INN & SUITES
635 ELMIRA ROAD
ITHACA, NEW YORK 14850

CHOICE PROPERTY I.D. # NY701

KING JACUZZI PLANS AND INTERIOR ELEVATIONS

A509
DRAWING NUMBER

12/28/18 9:14 SLEEP INN - ITHACA, NY\PRODUCTION\A500\KING JACUZZI ROOM DETAILS.DWG 12-21-18 9:49 AM PRINTED BY: USER06

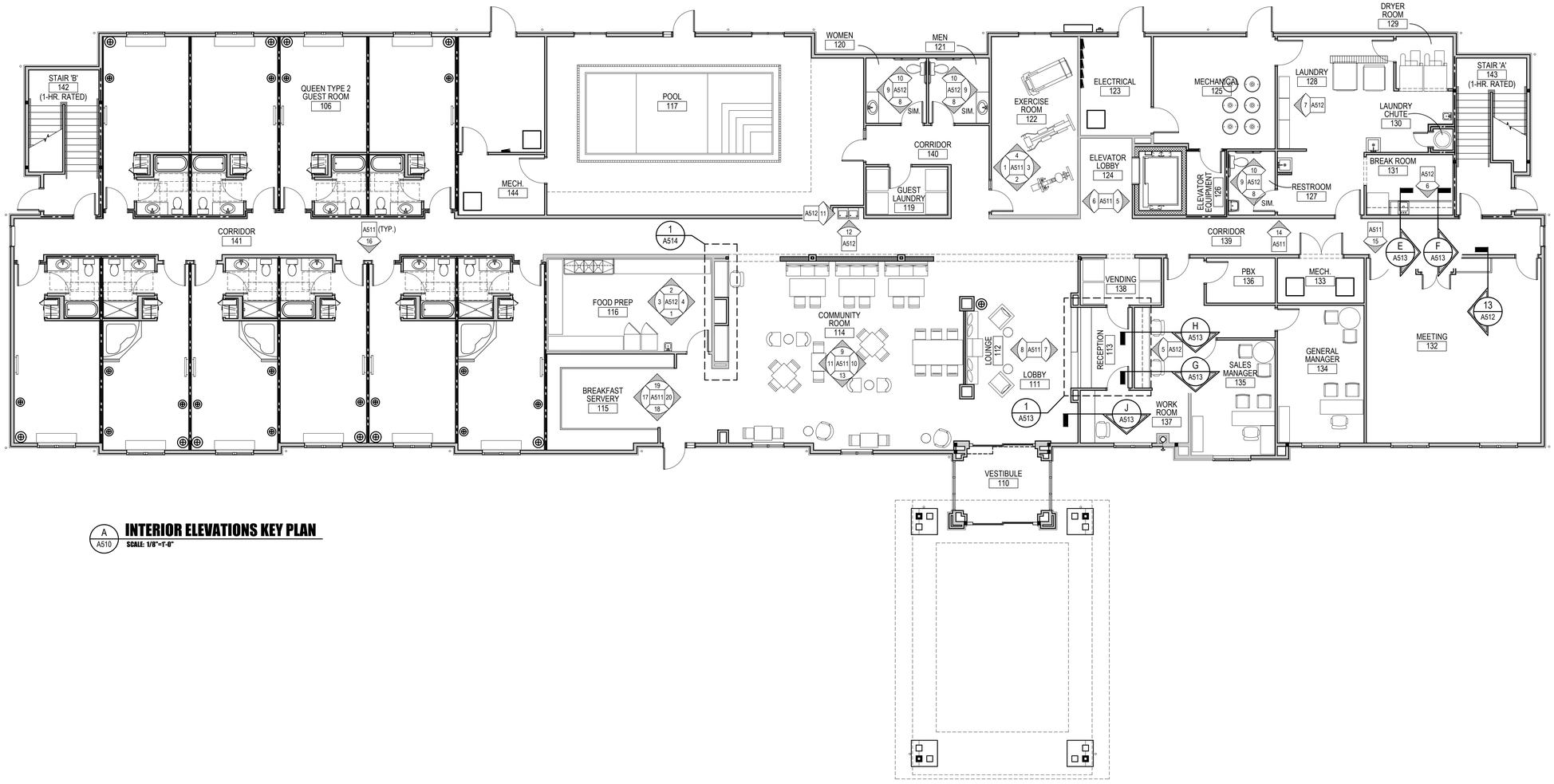

A
A510
INTERIOR ELEVATIONS KEY PLAN
SCALE: 1/8"=1'-0"

HEX 9 ARCHITECTS
An LLC Company
5427 Woodside Drive
Gap, PA 17527
(717) 442-9034
(717) 283-0097 fx
JOSEPH TURNOWCHYK, AIA, NCARB

STATE OF
NEW YORK
REGISTRATION #
036357-1

ALL CONTRACTORS ARE TO VERIFY ALL DIMENSIONS, FIELD CONDITIONS AND THE WORK OF OTHER TRADES BEFORE PROCEEDING WITH THEIR WORK.

This drawing is the exclusive property of HEX 9 ARCHITECTS and may not be reproduced in any form without written authorization from HEX 9 ARCHITECTS. Unauthorized reproduction or use of any or all parts of this drawing will constitute a violation of U.S. copyright laws.
COPYRIGHT © 2018 HEX 9 ARCHITECTS ALL RIGHTS RESERVED

REVISIONS

NUMBER	DATE	REVISED BY

DATE	FEBRUARY 6, 2018
DRAWN BY	BFL
PROJECT NUMBER	16114

NEW FACILITY FOR:
SLEEP INN & SUITES
635 ELMIRA ROAD
ITHACA, NEW YORK 14850

CHOICE PROPERTY I.D. # NY701

INTERIOR ELEVATIONS KEY PLAN

A510
DRAWING NUMBER

FINAL DRAWINGS

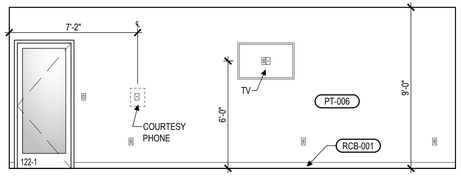

1 A511 **EXERCISE RM. ELEVATION**
SCALE: 1/4"=1'-0"

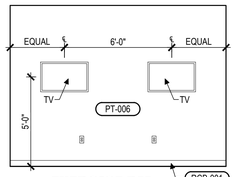

2 A511 **EXERCISE RM. ELEVATION**
SCALE: 1/4"=1'-0"

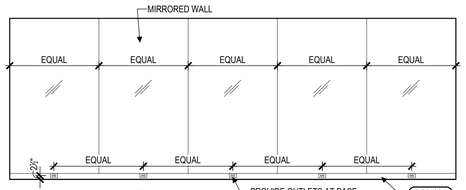

3 A511 **EXERCISE RM. ELEVATION**
SCALE: 1/4"=1'-0"

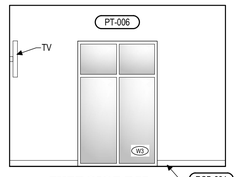

4 A511 **EXERCISE RM. ELEVATION**
SCALE: 1/4"=1'-0"

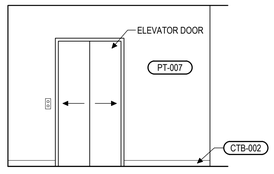

5 A511 **ELEV. LOBBY ELEVATION**
SCALE: 1/4"=1'-0"

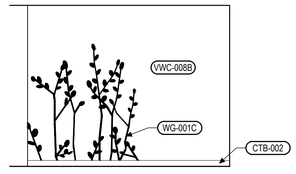

6 A511 **ELEV. LOBBY ELEVATION**
SCALE: 1/4"=1'-0"

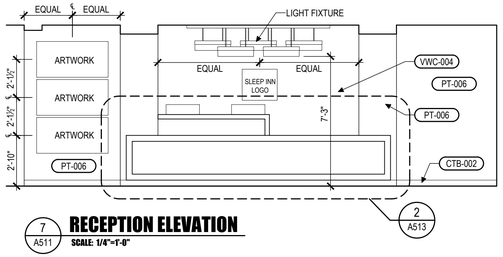

7 A511 **RECEPTION ELEVATION**
SCALE: 1/4"=1'-0"

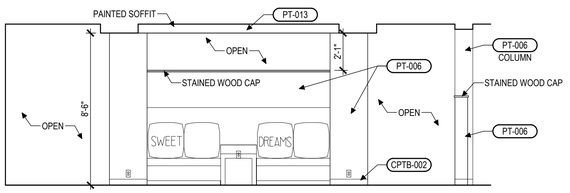

8 A511 **LOBBY/ LOUNGE ELEVATION**
SCALE: 1/4"=1'-0"

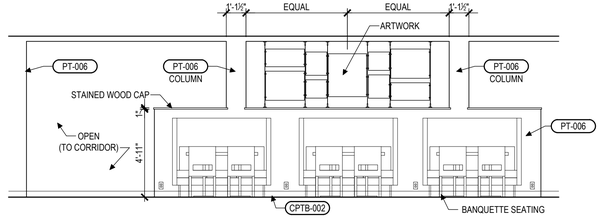

9 A511 **COMMUNITY RM. ELEVATION**
SCALE: 1/4"=1'-0"

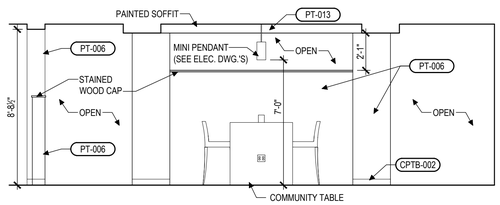

10 A511 **COMMUNITY RM. ELEVATION**
SCALE: 1/4"=1'-0"

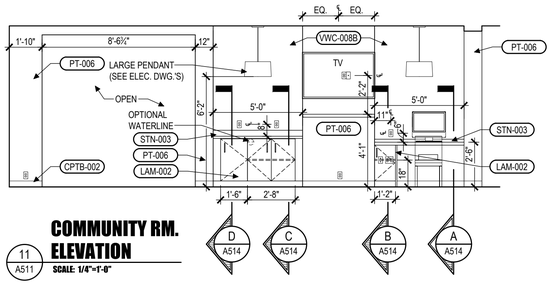

11 A511 **COMMUNITY RM. ELEVATION**
SCALE: 1/4"=1'-0"

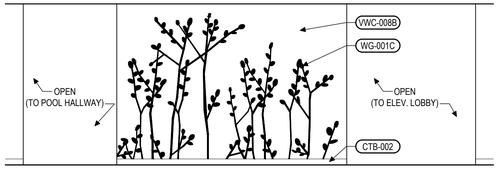

12 A511 **CORRIDOR ELEVATION**
SCALE: 1/4"=1'-0"

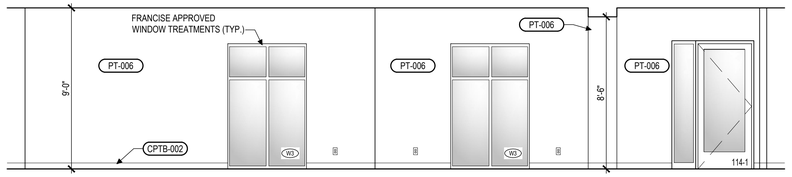

13 A511 **COMMUNITY RM. ELEVATION**
SCALE: 1/4"=1'-0"

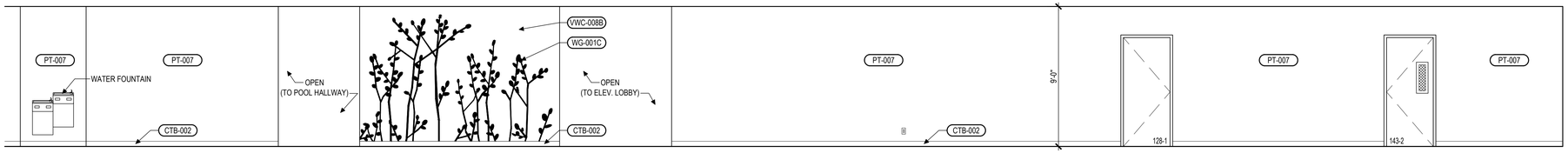

14 A511 **CORRIDOR ELEVATION**
SCALE: 1/4"=1'-0"

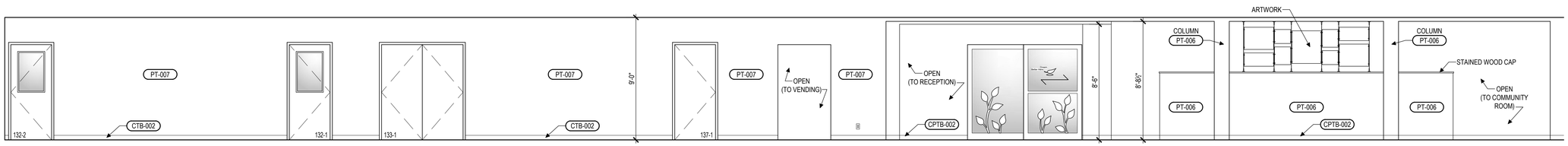

15 A511 **CORRIDOR ELEVATION**
SCALE: 1/4"=1'-0"

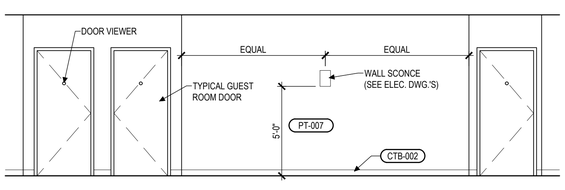

16 A511 **TYPICAL CORRIDOR ELEVATION**
SCALE: 1/4"=1'-0"

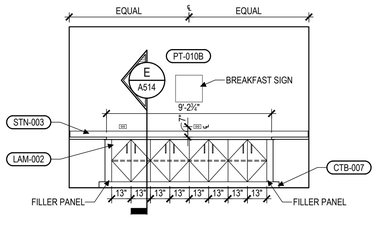

17 A511 **BREAKFAST SERVERY ELEVATION**
SCALE: 1/4"=1'-0"

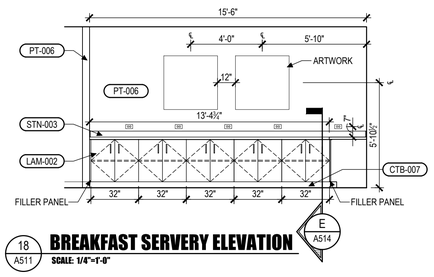

18 A511 **BREAKFAST SERVERY ELEVATION**
SCALE: 1/4"=1'-0"

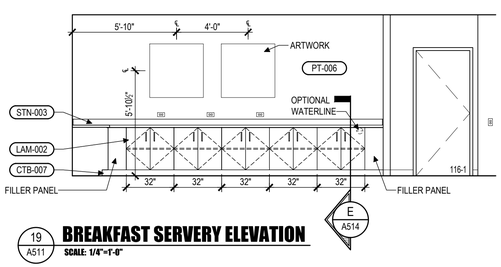

19 A511 **BREAKFAST SERVERY ELEVATION**
SCALE: 1/4"=1'-0"

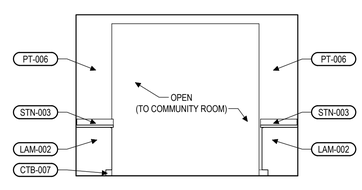

20 A511 **BREAKFAST SERVERY ELEVATION**
SCALE: 1/4"=1'-0"

INTERIOR FINISH NOTE(S)

1. SEE A500 FOR COMPLETE FINISH SCHEDULE.
2. SEE TYPICAL ROOM BLOW-UPS & LOBBY BLOW-UP FOR MORE FINISH & EQUIPMENT DETAILS.
3. SEE A501 FOR FURNITURE SCHEDULE.
4. SEE E301 FOR GUEST ROOM ELECTRICAL PLANS.

FINAL DRAWINGS

HEX 9 ARCHITECTS
5427 Woodside Drive
Gap, PA 17527
(717) 442-9094
(717) 285-0097 fx
An LLC Company
JOSEPH TURNOWCHYK, AIA, NCARB

STATE OF
NEW YORK
REGISTRATION #
036357-1

ALL CONTRACTORS ARE TO VERIFY ALL DIMENSIONS, FIELD CONDITIONS AND THE WORK OF OTHER TRADES BEFORE PROCEEDING WITH THEIR WORK.

This drawing is the exclusive property of HEX 9 ARCHITECTS and may not be reproduced in any form without written authorization from HEX 9 ARCHITECTS. Unauthorized reproduction or use of any or all parts of this drawing will constitute a violation of U.S. copyright laws.
COPYRIGHT © 2018 HEX 9 ARCHITECTS ALL RIGHTS RESERVED

REVISIONS

NUMBER	DATE	REVISED BY

DATE FEBRUARY 6, 2018
DRAWN BY CMT/BFL
PROJECT NUMBER 16114

NEW FACILITY FOR:
SLEEP INN & SUITES
635 ELMIRA ROAD
ITHACA, NEW YORK 14850
CHOICE PROPERTY I.D. # NY701

INTERIOR ELEVATIONS

A511
DRAWING NUMBER

[2018]114 SLEEP INN - ITHACA, NY\PRODUCTION\A511 INTERIOR ELEVATIONS.DWG 2-5-18 9:39 AM PRINTED BY: JSERB

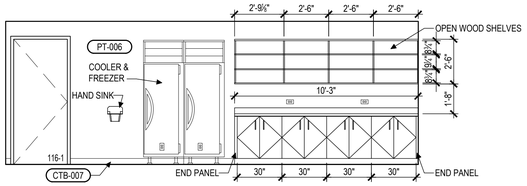

1 A512 **FOOD PREP ELEVATION**
SCALE: 1/4"=1'-0"

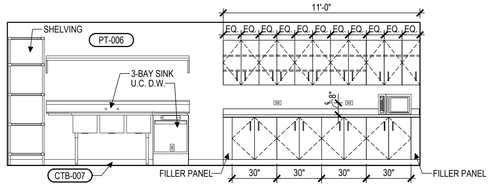

2 A512 **FOOD PREP ELEVATION**
SCALE: 1/4"=1'-0"

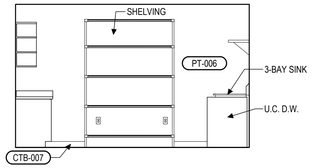

3 A512 **FOOD PREP ELEVATION**
SCALE: 1/4"=1'-0"

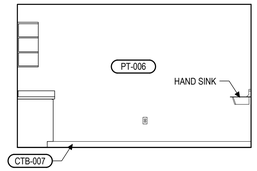

4 A512 **FOOD PREP ELEVATION**
SCALE: 1/4"=1'-0"

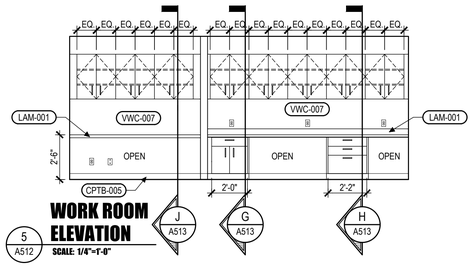

5 A512 **WORK ROOM ELEVATION**
SCALE: 1/4"=1'-0"

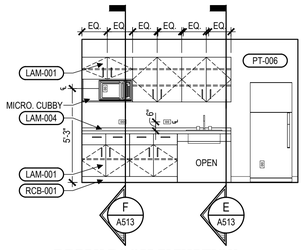

6 A512 **BREAK ROOM ELEVATION**
SCALE: 1/4"=1'-0"

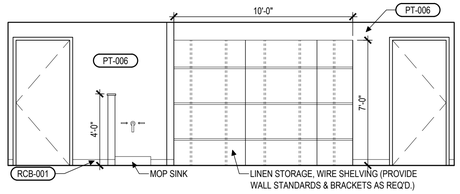

7 A512 **LAUNDRY ROOM ELEVATION**
SCALE: 1/4"=1'-0"

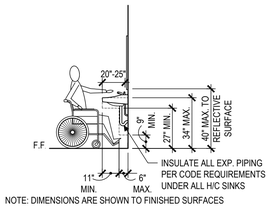

NOTE: DIMENSIONS ARE SHOWN TO FINISHED SURFACES

8 A512 **TYP. LAVATORY ELEVATION**
SCALE: 1/4"=1'-0"

NOTE: STN-003 COUNTERTOP VANITY TO BE
USED IN ROOMS WOMEN 120 AND MEN 121

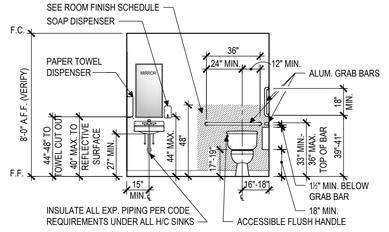

NOTE: DIMENSIONS ARE SHOWN TO FINISHED SURFACES

9 A512 **TYP. TOILET AND LAVATORY ELEVATION**
SCALE: 1/4"=1'-0"

NOTE: STN-003 COUNTERTOP VANITY TO BE
USED IN ROOMS WOMEN 120 AND MEN 121

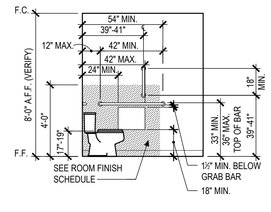

NOTE: DIMENSIONS ARE SHOWN TO FINISHED SURFACES

10 A512 **TYP. TOILET ELEVATION**
SCALE: 1/4"=1'-0"

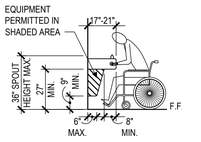

NOTE: DIMENSIONS ARE SHOWN TO FINISHED SURFACES

11 A512 **DRINING FOUNTAIN SIDE ELEVATION**
SCALE: 1/4"=1'-0"

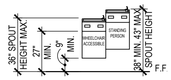

NOTE: DIMENSIONS ARE SHOWN TO FINISHED SURFACES

12 A512 **DRINKING FOUNTAIN FRONT ELEVATION**
SCALE: 1/4"=1'-0"

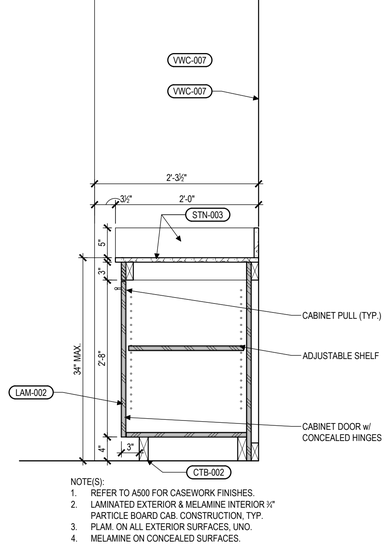

NOTE(S):
1. REFER TO A500 FOR CASEWORK FINISHES.
2. LAMINATED EXTERIOR & MELAMINE INTERIOR ¾" PARTICLE BOARD CAB. CONSTRUCTION, TYP.
3. PLAM. ON ALL EXTERIOR SURFACES, UNO.
4. MELAMINE ON CONCEALED SURFACES.

13 A512 **MEETING ROOM MILLWORK SECTION**
SCALE: 1"=1'-0"

FINAL DRAWINGS

HEX 9 ARCHITECTS
5427 Woodside Drive
Osp, PA 17027
(717) 448-9034
(717) 283-0097 fx
An LLC Company
JOSEPH TURNOWCHYK, AIA, NCARB

STATE OF
NEW YORK
REGISTRATION #
036357-1

ALL CONTRACTORS ARE TO VERIFY ALL DIMENSIONS, FIELD CONDITIONS AND THE WORK OF OTHER TRADES BEFORE PROCEEDING WITH THEIR WORK.

This drawing is the exclusive property of HEX 9 ARCHITECTS and may not be reproduced in any form without written authorization from HEX 9 ARCHITECTS. Unauthorized reproduction or use of any or all parts of this drawing will constitute a violation of U.S. copyright laws.
COPYRIGHT © 2018 HEX 9 ARCHITECTS ALL RIGHTS RESERVED

REVISIONS

NUMBER	DATE	REVISED BY

DATE	FEBRUARY 6, 2018
DRAWN BY	CMT/BFL
PROJECT NUMBER	16114

NEW FACILITY FOR:
SLEEP INN & SUITES
635 ELMIRA ROAD
ITHACA, NEW YORK 14850

CHOICE PROPERTY I.D. # NY701

INTERIOR ELEVATIONS

A512
DRAWING NUMBER

I:\2016\16114 SLEEP INN - ITHACA, NY\PRODUCTION\DWG\512 INTERIOR ELEVATIONS.DWG 2-15-18 9:35 AM PRINTED BY: USER08

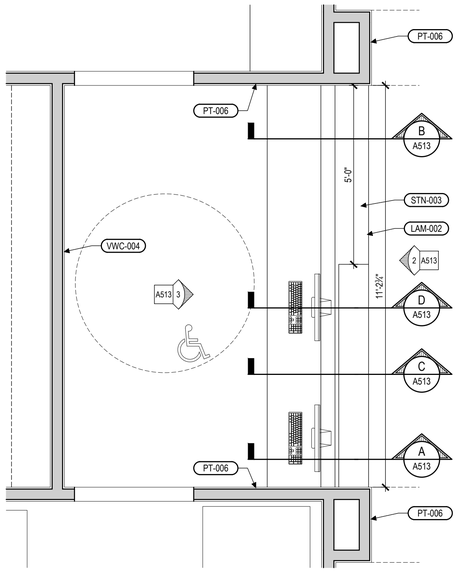

1 A513 **RECEPTION FLOOR PLAN**
SCALE: 1/2"=1'-0"

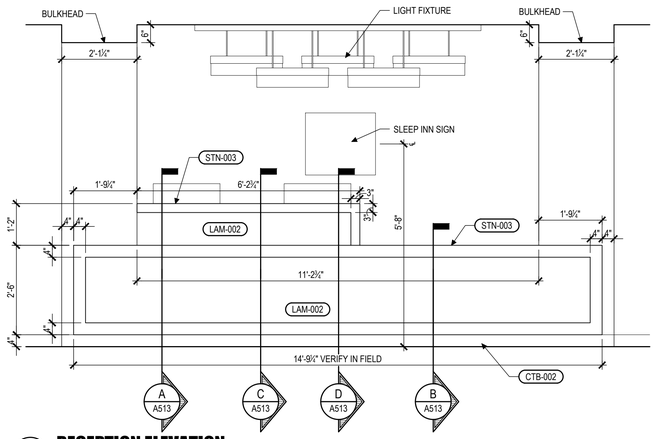

2 A513 **RECEPTION ELEVATION**
SCALE: 1/2"=1'-0"

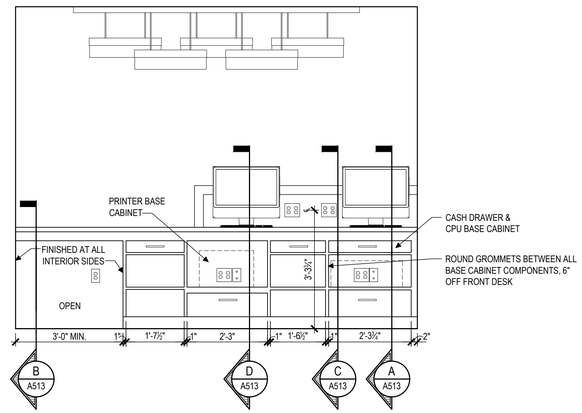

3 A513 **RECEPTION ELEVATION**
SCALE: 1/2"=1'-0"

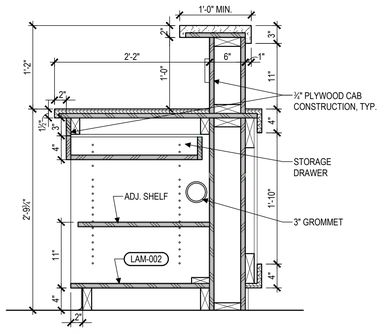

NOTE(S):
1. REFER TO A500 FOR CASEWORK FINISHES.
2. LAMINATED AT VISIBLE SURFACE & MELAMINE INTERIOR ¾" PARTICLE BOARD CAB CONSTRUCTION (TYP.)

A A513 **RECEPTION MILLWORK DETAIL**
SCALE: 1"=1'-0"

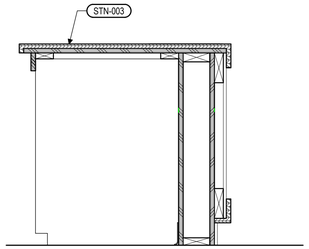

NOTE(S):
1. REFER TO A500 FOR CASEWORK FINISHES.
2. LAMINATED AT VISIBLE SURFACE & MELAMINE INTERIOR ¾" PARTICLE BOARD CAB CONSTRUCTION (TYP.)

B A513 **RECEPTION MILLWORK DETAIL**
SCALE: 1"=1'-0"

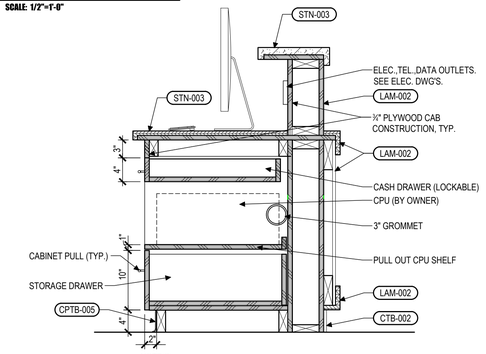

NOTE(S):
1. REFER TO A500 FOR CASEWORK FINISHES.
2. LAMINATED AT VISIBLE SURFACE & MELAMINE INTERIOR ¾" PARTICLE BOARD CAB CONSTRUCTION (TYP.)

C A513 **RECEPTION MILLWORK DETAIL**
SCALE: 1"=1'-0"

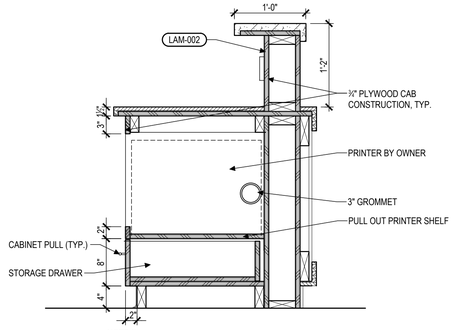

NOTE(S):
1. REFER TO A500 FOR CASEWORK FINISHES.
2. LAMINATED AT VISIBLE SURFACE & MELAMINE INTERIOR ¾" PARTICLE BOARD CAB CONSTRUCTION (TYP.)

D A513 **RECEPTION MILLWORK DETAIL**
SCALE: 1"=1'-0"

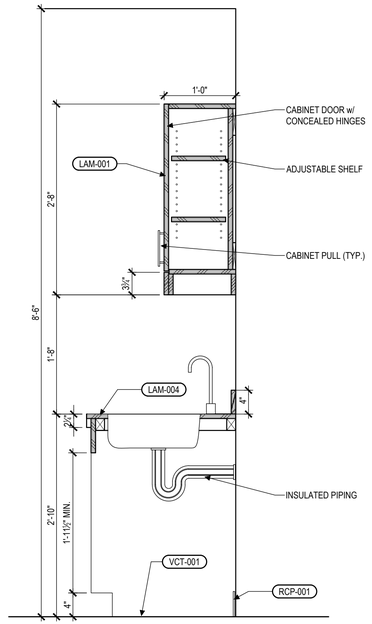

NOTE(S):
1. REFER TO A500 FOR CASEWORK FINISHES.
2. LAMINATED EXTERIOR & MELAMINE INTERIOR ¾" PARTICLE BOARD CAB. CONSTRUCTION, TYP.
3. PLAM. ON ALL EXTERIOR SURFACES, UNO.
4. MELAMINE ON CONCEALED SURFACES.

E A513 **EMPLOYEE BREAK MILLWORK DETAIL**
SCALE: 1"=1'-0"

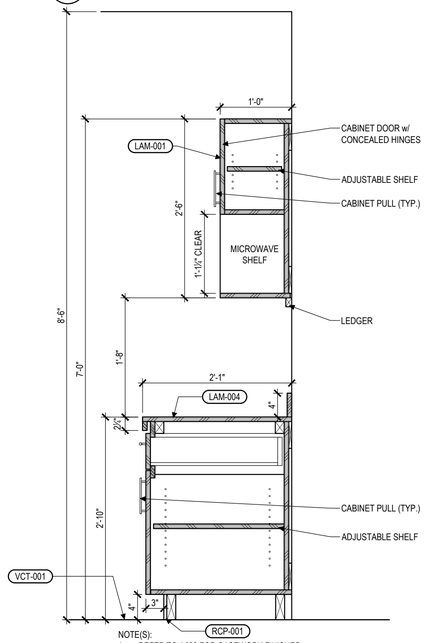

NOTE(S):
1. REFER TO A500 FOR CASEWORK FINISHES.
2. LAMINATED EXTERIOR & MELAMINE INTERIOR ¾" PARTICLE BOARD CAB. CONSTRUCTION, TYP.
3. PLAM. ON ALL EXTERIOR SURFACES, UNO.
4. MELAMINE ON CONCEALED SURFACES.

F A513 **EMPLOYEE BREAK MILLWORK DETAIL**
SCALE: 1"=1'-0"

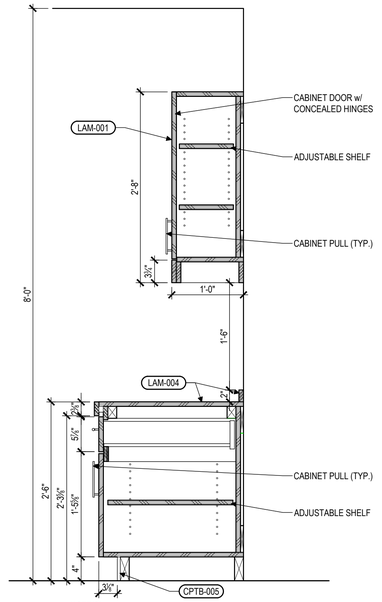

NOTE(S):
1. REFER TO A500 FOR CASEWORK FINISHES.
2. LAMINATED EXTERIOR & MELAMINE INTERIOR ¾" PARTICLE BOARD CAB. CONSTRUCTION, TYP.

G A513 **WORK ROOM CABINETS MILLWORK DETAIL**
SCALE: 1"=1'-0"

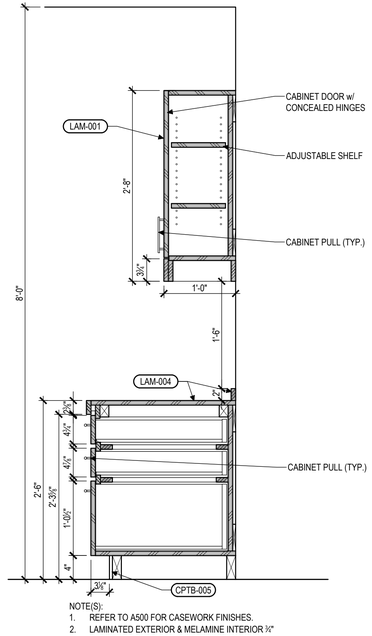

NOTE(S):
1. REFER TO A500 FOR CASEWORK FINISHES.
2. LAMINATED EXTERIOR & MELAMINE INTERIOR ¾" PARTICLE BOARD CAB. CONSTRUCTION, TYP.
3. PLAM. ON ALL EXTERIOR SURFACES, UNO.
4. MELAMINE ON CONCEALED SURFACES.

H A513 **WORK ROOM CABINETS MILLWORK DETAIL**
SCALE: 1"=1'-0"

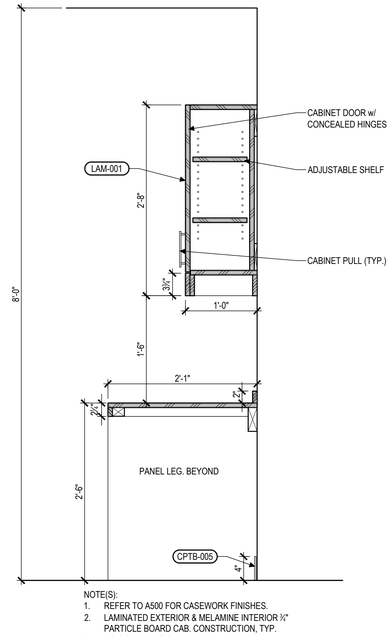

NOTE(S):
1. REFER TO A500 FOR CASEWORK FINISHES.
2. LAMINATED EXTERIOR & MELAMINE INTERIOR ¾" PARTICLE BOARD CAB. CONSTRUCTION, TYP.
3. NO COUNTER @ SIM.
4. PLAM. ON ALL EXTERIOR VISIBLE SURFACES, UNO.
5. MELAMINE ON CONCEALED SURFACES

J A513 **WORK ROOM CABINETS MILLWORK DETAIL**
SCALE: 1"=1'-0"

FINAL DRAWINGS

HEX 9 ARCHITECTS
5427 Woodside Drive
Osp, PA 17577
(717) 442-9034
(717) 283-0097 fx
An LLC Company
JOSEPH TURNOWCHYK, AIA, NCARB

STATE OF
NEW YORK
REGISTRATION #
036357-1

ALL CONTRACTORS ARE TO VERIFY ALL DIMENSIONS, FIELD CONDITIONS AND THE WORK OF OTHER TRADES BEFORE PROCEEDING WITH THEIR WORK.

This drawing is the exclusive property of HEX 9 ARCHITECTS and may not be reproduced in any form without written authorization from HEX 9 ARCHITECTS. Unauthorized reproduction or use of any or all parts of this drawing will constitute a violation of U.S. copyright laws.
COPYRIGHT © 2018 HEX 9 ARCHITECTS ALL RIGHTS RESERVED

REVISIONS

NUMBER	DATE	REVISED BY

DATE FEBRUARY 6, 2018
DRAWN BY CMT/BFL
PROJECT NUMBER 16114

NEW FACILITY FOR:
SLEEP INN & SUITES
635 ELMIRA ROAD
ITHACA, NEW YORK 14850
CHOICE PROPERTY I.D. # NY701

MILLWORK DETAILS

A513
DRAWING NUMBER

2018-10-16 6:53P RTH - ITHACA, NY/PRODUCTION/A513 MILLWORK DETAILS.DWG 08-31-18 9:39 AM PRINTED BY: USER06

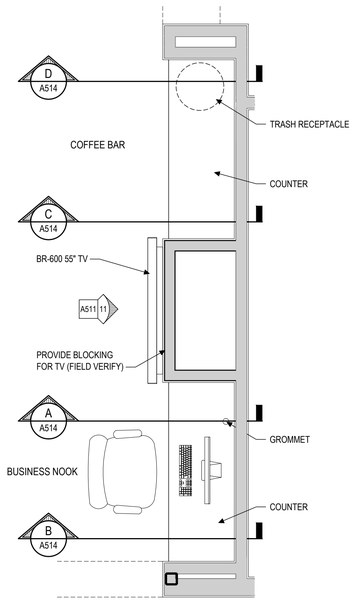

1 A514 **BUSINESS NOOK AND COFFEE STATION FLOOR PLAN**
SCALE: 1/2"=1'-0"

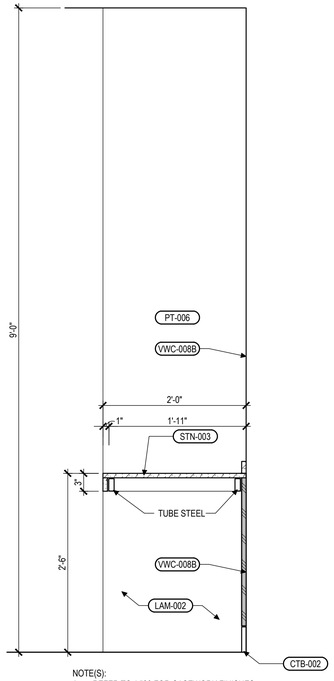

NOTE(S):
1. REFER TO A500 FOR CASEWORK FINISHES.
2. LAMINATED EXTERIOR & MELAMINE INTERIOR ¾" PARTICLE BOARD CAB. CONSTRUCTION, TYP.
3. PLAM. ON ALL EXTERIOR SURFACES, UNO.
4. MELAMINE ON CONCEALED SURFACES.

A A514 **BUSINESS NOOK MILLWORK DETAIL**
SCALE: 1"=1'-0"

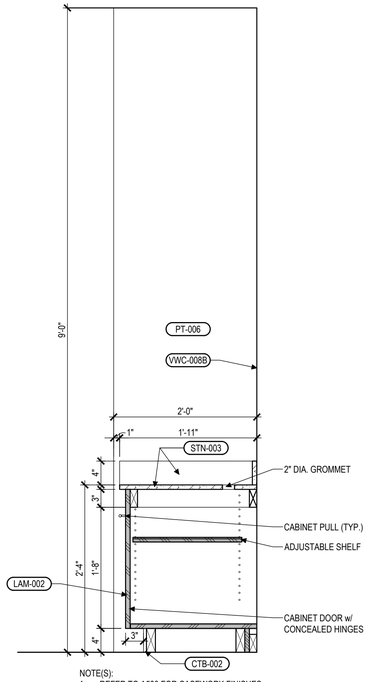

NOTE(S):
1. REFER TO A500 FOR CASEWORK FINISHES.
2. LAMINATED EXTERIOR & MELAMINE INTERIOR ¾" PARTICLE BOARD CAB. CONSTRUCTION, TYP.
3. PLAM. ON ALL EXTERIOR SURFACES, UNO.
4. MELAMINE ON CONCEALED SURFACES.

B A514 **BUSINESS NOOK MILLWORK DETAIL**
SCALE: 1"=1'-0"

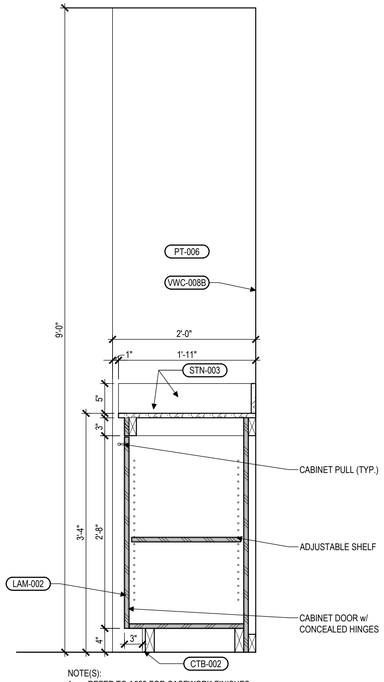

NOTE(S):
1. REFER TO A500 FOR CASEWORK FINISHES.
2. LAMINATED EXTERIOR & MELAMINE INTERIOR ¾" PARTICLE BOARD CAB. CONSTRUCTION, TYP.
3. PLAM. ON ALL EXTERIOR SURFACES, UNO.
4. MELAMINE ON CONCEALED SURFACES.

C A514 **COFFEE BAR MILLWORK DETAIL**
SCALE: 1"=1'-0"

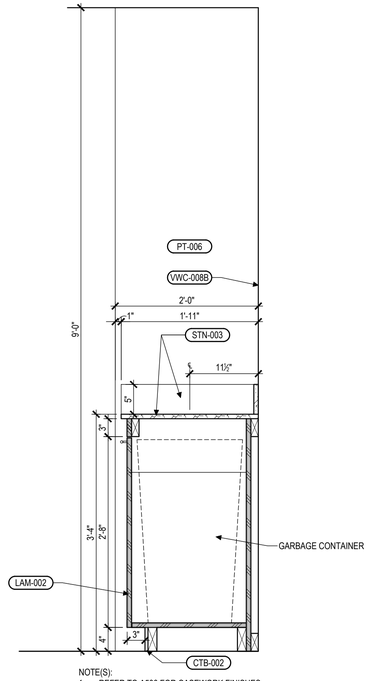

NOTE(S):
1. REFER TO A500 FOR CASEWORK FINISHES.
2. LAMINATED EXTERIOR & MELAMINE INTERIOR ¾" PARTICLE BOARD CAB. CONSTRUCTION, TYP.
3. PLAM. ON ALL EXTERIOR SURFACES, UNO.
4. MELAMINE ON CONCEALED SURFACES.

D A514 **COFFEE BAR MILLWORK DETAIL**
SCALE: 1"=1'-0"

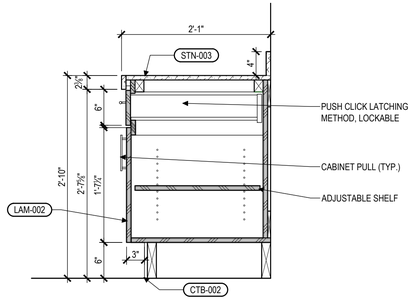

NOTE(S):
1. REFER TO A500 FOR CASEWORK FINISHES.
2. LAMINATED EXTERIOR & MELAMINE INTERIOR ¾" PARTICLE BOARD CAB. CONSTRUCTION, TYP.
3. PLAM. ON ALL EXTERIOR SURFACES, UNO.
4. MELAMINE ON CONCEALED SURFACES.

E A514 **BREAKFAST SERVERY TYPICAL MILLWORK DETAIL**
SCALE: 1"=1'-0"

FINAL DRAWINGS

HEX 9 ARCHITECTS
5427 Woodside Drive
Gap, PA 17527
(717) 442-9034
(717) 283-0097 fx
An LLC Company
JOSEPH TURNOWCHYK, AIA, NCARB

STATE OF
NEW YORK
REGISTRATION #
036357-1

ALL CONTRACTORS ARE TO VERIFY ALL DIMENSIONS, FIELD CONDITIONS AND THE WORK OF OTHER TRADES BEFORE PROCEEDING WITH THEIR WORK.

This drawing is the exclusive property of HEX 9 ARCHITECTS and may not be reproduced in any form without written authorization from HEX 9 ARCHITECTS. Unauthorized reproduction or use of any or all parts of this drawing will constitute a violation of U.S. copyright laws.
COPYRIGHT © 2018 - HEX 9 ARCHITECTS - ALL RIGHTS RESERVED

REVISIONS

NUMBER	DATE	REVISED BY

DATE	FEBRUARY 6, 2018
DRAWN BY	CMT/BFL
PROJECT NUMBER	16114

NEW FACILITY FOR:
SLEEP INN & SUITES CHOICE PROPERTY I.D. # NY701
635 ELMIRA ROAD
ITHACA, NEW YORK 14850

MILLWORK DETAILS

A514
DRAWING NUMBER

2018-0114 SLEEP INN - ITHACA, NY\PRODUCTION\A514 MILLWORK DETAILS.DWG 05-31-18 9:36 AM PRINTED BY: USERB

INTERIOR FINISH NOTE(S)

1. SEE A500 FOR COMPLETE FINISH SCHEDULE.
2. SEE TYPICAL ROOM BLOW-UPS & LOBBY BLOW-UP FOR MORE FINISH & EQUIPMENT DETAILS.

FIRST FLOOR REFLECTED CEILING PLAN

1 A601 SCALE: 1/8"=1'-0"

RCP SYMBOLS LEGEND

A1 X'-X"	A1 = SUSPENDED DRYWALL PAINTED CEILING
A2 BOS	A2 = DRYWALL PAINTED CEILING APPLIED TO 'BOTTOM OF STRUCTURE'
B1 X'-X"	B1 = SPRAY ON TEXTURED FINISH OVER SUSPENDED DRYWALL
B2 BOS	B2 = SPRAY ON TEXTURED FINISH OVER DRYWALL 'BOTTOM OF STRUCTURE'
C X'-X"	C = 2'x4' TEGULAR ACOUSTICAL CEILING TILE WASHABLE SURFACE @ KITCHEN & PANTRY
D X'-X"	D = E.I.F.S. CEILING / SOFFIT
E X'-X"	E = 2'X2' FINE TEXTURED TEGULAR STYLE ACOUSTICAL CEILING TILE
	RECESSED DOWNLIGHT (PROVIDE 1 HR. RATED ENCLOSURE WHERE REQUIRED)
	OWNER SUPPLIED SURFACE MOUNTED DECORATIVE FIXTURE
	DIRECTIONAL SPOT LIGHT
	1' x 4' FLUORESCENT LIGHT FIXTURE, SURFACE OR RECESSED
	2' x 2' FLUORESCENT LIGHT FIXTURE,SURFACE OR RECESSED
	2' x 4' FLUORESCENT LIGHT FIXTURE RECESSED INTO CEILING GRID
	SUPPLY AIR DIFFUSER- SEE MECHANICAL DRAWINGS FOR SIZE
	RETURN AIR DIFFUSER- SEE MECHANICAL DRAWINGS FOR SIZE
EF	EXHAUST FAN
EG	EXHAUST GRILLE CONNECTED TO EXHAUST SYSTEM
	PENDANT OVER FRONT DESK

FINAL DRAWINGS

HEX 9 ARCHITECTS
5427 Woodside Drive
Gap, PA 17527
(717) 442-9094
(717) 283-0097 fx
An LLC Company
JOSEPH TURNOWCHYK, AIA, NCARB

STATE OF NEW YORK REGISTRATION # 036357-1

ALL CONTRACTORS ARE TO VERIFY ALL DIMENSIONS, FIELD CONDITIONS AND THE WORK OF OTHER TRADES BEFORE PROCEEDING WITH THEIR WORK.

This drawing is the exclusive property of HEX 9 ARCHITECTS and may not be reproduced in any form without written authorization from HEX 9 ARCHITECTS. Unauthorized reproduction or use of any or all parts of this drawing will constitute a violation of U.S. copyright laws.
COPYRIGHT © 2018 HEX 9 ARCHITECTS ALL RIGHTS RESERVED

REVISIONS

NUMBER	DATE	REVISED BY

DATE	FEBRUARY 6, 2018
DRAWN BY	CMT
PROJECT NUMBER	16114

NEW FACILITY FOR:
SLEEP INN & SUITES CHOICE PROPERTY I.D. # NY701
635 ELMIRA ROAD
ITHACA, NEW YORK 14850

GROUND LEVEL REFLECTED CEILING PLAN

A601
DRAWING NUMBER

I:\2016\16114 SLEEP INN, ITHACA, NY\PRODUCTION\A601 FIRST FLOOR RCP.DWG 06-01-18 11:09 AM PRINTED BY: USER06

INTERIOR FINISH NOTE(S)

1. SEE A500 FOR COMPLETE FINISH SCHEDULE.
2. SEE TYPICAL ROOM BLOW-UPS & LOBBY BLOW-UP FOR MORE FINISH & EQUIPMENT DETAILS.

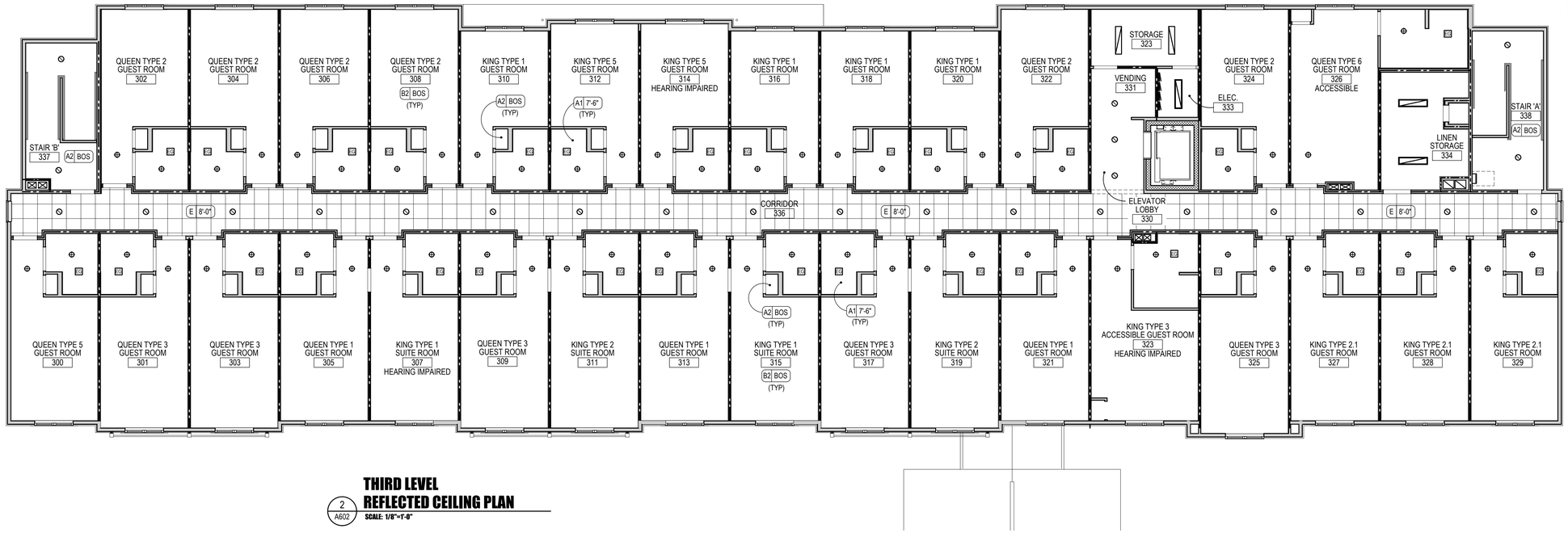

THIRD LEVEL REFLECTED CEILING PLAN

2 / A602 SCALE: 1/8"=1'-0"

SECOND LEVEL REFLECTED CEILING PLAN

1 / A602 SCALE: 1/8"=1'-0"

RCP SYMBOLS LEGEND

A1 X'-X"	A1 = SUSPENDED DRYWALL PAINTED CEILING
A2 BOS	A2 = DRYWALL PAINTED CEILING APPLIED TO 'BOTTOM OF STRUCTURE'
B1 X'-X"	B1 = SPRAY ON TEXTURED FINISH OVER SUSPENDED DRYWALL
B2 BOS	B2 = SPRAY ON TEXTURED FINISH OVER DRYWALL 'BOTTOM OF STRUCTURE'
C X'-X"	C = 2'x4' TEGULAR ACOUSTICAL CEILING TILE WASHABLE SURFACE @ KITCHEN & PANTRY
D X'-X"	D = E.I.F.S. CEILING / SOFFIT
E X'-X"	E = 2'X2' FINE TEXTURED TEGULAR STYLE ACOUSTICAL CEILING TILE
	RECESSED DOWNLIGHT (PROVIDE 1 HR. RATED ENCLOSURE WHERE REQUIRED)
	OWNER SUPPLIED SURFACE MOUNTED DECORATIVE FIXTURE
	DIRECTIONAL SPOT LIGHT
	1' x 4' FLUORESCENT LIGHT FIXTURE, SURFACE OR RECESSED
	2' x 2' FLUORESCENT LIGHT FIXTURE SURFACE OR RECESSED
	2' x 4' FLUORESCENT LIGHT FIXTURE RECESSED INTO CEILING GRID
	SUPPLY AIR DIFFUSER- SEE MECHANICAL DRAWINGS FOR SIZE
	RETURN AIR DIFFUSER- SEE MECHANICAL DRAWINGS FOR SIZE
EF	EXHAUST FAN
EG	EXHAUST GRILLE CONNECTED TO EXHAUST SYSTEM
	PENDANT OVER FRONT DESK

FINAL DRAWINGS

HEX 9 ARCHITECTS
5427 Woodside Drive
Gap, PA 17527
(717) 442-9094
(717) 283-0097 fx
An LLC Company
JOSEPH TURNOWCHYK, AIA, NCARB

STATE OF NEW YORK REGISTRATION # 036357-1

ALL CONTRACTORS ARE TO VERIFY ALL DIMENSIONS, FIELD CONDITIONS AND THE WORK OF OTHER TRADES BEFORE PROCEEDING WITH THEIR WORK.

This drawing is the exclusive property of HEX 9 ARCHITECTS and may not be reproduced in any form without written authorization from HEX 9 ARCHITECTS. Unauthorized reproduction or use of any or all parts of this drawing will constitute a violation of U.S. copyright laws.

COPYRIGHT © 2018 HEX 9 ARCHITECTS ALL RIGHTS RESERVED

REVISIONS

NUMBER	DATE	REVISED BY

DATE FEBRUARY 6, 2018
DRAWN BY CMT
PROJECT NUMBER 16114

NEW FACILITY FOR:
SLEEP INN & SUITES CHOICE PROPERTY I.D. # NY701
635 ELMIRA ROAD
ITHACA, NEW YORK 14850

SECOND & THIRD LEVEL REFLECTED CEILING PLAN

A602
DRAWING NUMBER

12/6/2018 6:57:07 PM - ITHACA, NY/PRODUCTION/ARCH/SECOND-THIRD FLOOR RCP.DWG (5-3-1) 8.36 AM PRINTED BY: USER36

RCP SYMBOLS LEGEND

A1 X'-X"	A1 = SUSPENDED DRYWALL PAINTED CEILING
A2 BOS	A2 = DRYWALL PAINTED CEILING APPLIED TO 'BOTTOM OF STRUCTURE'
B1 X'-X"	B1 = SPRAY ON TEXTURED FINISH OVER SUSPENDED DRYWALL
B2 BOS	B2 = SPRAY ON TEXTURED FINISH OVER DRYWALL 'BOTTOM OF STRUCTURE'
C X'-X"	C = 2'x4' TEGULAR ACOUSTICAL CEILING TILE WASHABLE SURFACE @ KITCHEN & PANTRY
D X'-X"	D = E.I.F.S. CEILING / SOFFIT
E X'-X"	E = 2'X2' FINE TEXTURED TEGULAR STYLE ACOUSTICAL CEILING TILE
	RECESSED DOWNLIGHT (PROVIDE 1 HR. RATED ENCLOSURE WHERE REQUIRED)
	OWNER SUPPLIED SURFACE MOUNTED DECORATIVE FIXTURE
	DIRECTIONAL SPOT LIGHT
	1' x 4' FLUORESCENT LIGHT FIXTURE, SURFACE OR RECESSED
	2' x 2' FLUORESCENT LIGHT FIXTURE,SURFACE OR RECESSED
	2' x 4' FLUORESCENT LIGHT FIXTURE RECESSED INTO CEILING GRID
	SUPPLY AIR DIFFUSER- SEE MECHANICAL DRAWINGS FOR SIZE
	RETURN AIR DIFFUSER- SEE MECHANICAL DRAWINGS FOR SIZE
EF	EXHAUST FAN
EG	EXHAUST GRILLE CONNECTED TO EXHAUST SYSTEM
	PENDANT OVER FRONT DESK

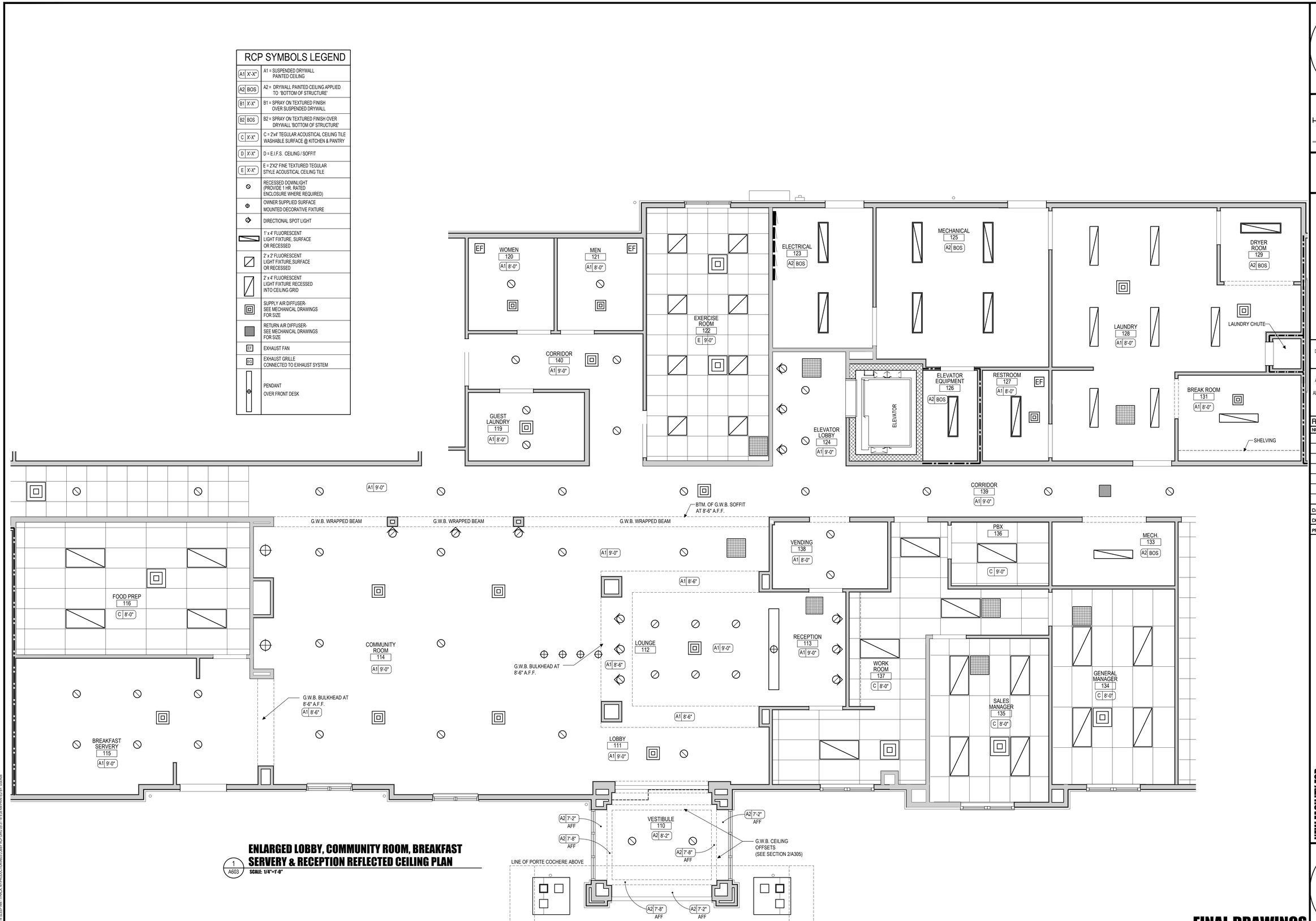

1 A603 ENLARGED LOBBY, COMMUNITY ROOM, BREAKFAST SERVERY & RECEPTION REFLECTED CEILING PLAN
SCALE: 1/4"=1'-0"

HEX 9 ARCHITECTS
5427 Woodside Drive
Gap, PA 17527
(717) 442-9094
(717) 283-0097 fx
An LLC Company
JOSEPH TURNOWCHYK, AIA, NCARB

STATE OF NEW YORK REGISTRATION # 036357-1

ALL CONTRACTORS ARE TO VERIFY ALL DIMENSIONS, FIELD CONDITIONS AND THE WORK OF OTHER TRADES BEFORE PROCEEDING WITH THEIR WORK.

This drawing is the exclusive property of HEX 9 ARCHITECTS and may not be reproduced in any form without written authorization from HEX 9 ARCHITECTS. Unauthorized reproduction or use of any or all parts of this drawing will constitute a violation of U.S. copyright laws.
COPYRIGHT © 2018 HEX 9 ARCHITECTS ALL RIGHTS RESERVED

REVISIONS

NUMBER	DATE	REVISED BY

DATE FEBRUARY 6, 2018
DRAWN BY CMT
PROJECT NUMBER 16114

NEW FACILITY FOR:
SLEEP INN & SUITES CHOICE PROPERTY I.D. # NY701
635 ELMIRA ROAD
ITHACA, NEW YORK 14850

ENLARGED COMMON AREA REFLECTED CEILING PLAN

A603
DRAWING NUMBER

FINAL DRAWINGS

I:2018\1814 SLEEP INN - ITHACA, NY\PRODUCTION\ARCH\1 LOBBY RCP.DWG 6-21-18 9:33 AM PRINTED BY: MBROK

DIVISION 1 GENERAL CONDITIONS

1 TEMPORARY FACILITIES:
A NO TEMPORARY WATER IS PROVIDED.
B TEMPORARY ELECTRIC WILL BE PROVIDED BY ELECTRICAL CONTRACTOR AS SOON AS CONDITIONS PERMIT. SUBCONTRACTORS SHOULD PROVIDE THEIR OWN GENERATOR FOR REQUIRED POWER.
C JOB SITE TRAILER FOR SITE MEETINGS TO BE PROVIDED BY G.C. (OPTIONAL) AS SOON AS CONDITIONS PERMIT.
D TEMPORARY STORAGE (LOCKABLE) WILL BE THE RESPONSIBILITY OF EACH SUBCONTRACTOR.
E EACH CONTRACTOR SHALL SUPPLY AND PAY FOR THEIR OWN TELEPHONE AND FAX SERVICE AS THEY REQUIRE.

2 EXISTING CONDITIONS:
A ALL SUBCONTRACTORS ARE RESPONSIBLE TO VISIT THE PROPERTY PRIOR TO SUBMITTING A BID. ALL VISIBLE EXISTING CONDITIONS THAT DO NOT CORRESPOND TO THE BIDDING DOCUMENTS WILL BE THE RESPONSIBILITY OF THE SUBCONTRACTOR AND SHOULD BE REPORTED TO THE GENERAL CONTRACTOR PRIOR TO SUBMITTING YOUR BID.

3 DEBRIS REMOVAL:
A EACH SUBCONTRACTOR WILL BE REQUIRED TO REMOVE DEBRIS FROM HIS WORK DAILY. ALL DEBRIS REMOVAL IS THE RESPONSIBILITY OF EACH SUB. COORDINATE ALL DUMPSTER DROPS WITH GENERAL CONTRACTOR'S JOB SITE SUPERINTENDENT.

4 BIDDING CONDITIONS:
A EACH SUB/TRADE IS RESPONSIBLE TO PROVIDE A COMPLETE BID FOR THEIR PORTION OF WORK WHETHER INDICATED IN THESE SPECIFICATIONS AND DRAWINGS OR NOT UNLESS SPECIFICALLY EXCLUDED.
B UTILITY COMPANY ENGINEERING OR CONNECTION FEES ARE NOT INCLUDED IN BID.
C SUBCONTRACTOR ACKNOWLEDGES, BY SUBMITTING A BID, THAT HE HAS REVIEWED ALL DRAWINGS TO INSURE A COMPLETE BID

5 SUBMITTALS:
A ALL SUBCONTRACTORS AND SUPPLIERS SHALL BE REQUIRED TO SUBMIT 3 COPIES (SAMPLES) OF ALL PRODUCTS, FOR VERIFICATION OF SPEC. COMPLIANCE AND COLOR SELECTION PRIOR TO ANY ORDERING OR STOCKING FOR THIS PROJECT.
NOTE: PATTERNED OR TEXTURED WALL COVERINGS AND OR SIMILAR FINISH MATERIALS, MUST HAVE A MINIMUM (TRIPLICATE) SAMPLE SIZE OF 12" X 12".
B ALL SUBSTITUTIONS FOR SPECIFIED PRODUCTS WHERE "APPROVED EQUAL" IS NOTED MUST BE APPROVED BY ARCHITECT AND OWNER. THE RESPONSIBILITY FOR APPROVED EQUAL RESTS SOLELY ON THE GC TO PROVE EQUAL QUALITY AND SUBMIT ALL DOCUMENTATION TO PROVE THE SAME.

6 OSHA GUIDELINES:
A ALL CURRENT OSHA GUIDELINES AND PRACTICES MUST BE FOLLOWED. FAILURE TO DO SO COULD RESULT IN REMOVAL FROM THE PROJECT.

7 INSURANCE REQUIREMENTS ARTICLE 13.1:
A PRIOR TO STARTING WORK, THE SUBCONTRACTOR SHALL OBTAIN THE REQUIRED INSURANCE FROM A RESPONSIBLE INSURER, AND SHALL FURNISH SATISFACTORY EVIDENCE TO THE CONTRACTOR THAT THE SUBCONTRACTOR HAS COMPLIED WITH THE REQUIREMENTS OF THIS ARTICLE 13. SIMILARLY, THE CONTRACTOR SHALL FURNISH TO THE SUBCONTRACTOR SATISFACTORY EVIDENCE OF INSURANCE REQUIRED OF THE CONTRACTOR BY THE CONTRACT DOCUMENTS.
B THE CONTRACTOR AND SUBCONTRACTOR WAIVE ALL RIGHTS AGAINST EACH OTHER AND AGAINST THE OWNER, THE ARCHITECT, SEPARATE CONTRACTORS AND ALL OTHER SUBCONTRACTORS FOR DAMAGES CAUSED BY FIRE OR OTHER PERILS TO THE EXTENT COVERED BY PROPERTY INSURANCE PROVIDED UNDER THE GENERAL CONDITIONS, EXCEPT SUCH RIGHTS AS THEY MAY HAVE TO THE PROCEEDS OF SUCH INSURANCE.
C CERTIFICATES IN DUPLICATE EVIDENCING SUCH COVERAGE, INCLUDING A STATEMENT TO THE EFFECT THAT CANCELLATION OR TERMINATION OF THE INSURANCE SHALL NOT BE EFFECTIVE UNTIL TEN (10) DAYS AFTER RECEIPT OF WRITTEN NOTICE BY THE CONTRACTOR, SHALL BE FURNISHED TO THE CONTRACTOR BEFORE COMMENCEMENT OF THE WORK. THE STATEMENT OF LIMITS OF INSURANCE COVERAGE SHALL NOT BE CONSTRUCTED IN ANY WAY LIMITING THE SUBCONTRACTOR'S PERSONAL LIABILITY UNDER THIS AGREEMENT.

DIVISION 2 SITE WORK

GENERAL STATEMENT:
WORK TO BE INCLUDED:
THE PAD SITE WILL BE GRADED TO THE PAD GRADE BY THE SITE CONTRACTOR WITH IN 1" PLUS OR MINUS. ALL GRADING BEYOND THE BUILDING AND COVERED WALKWAY WILL BE BY THE SITE CONTRACTOR.
1 INCLUDE ALL EXCAVATING AND BACKFILL FOR BUILDING AND ANY COVERED GAZEBO FOUNDATIONS. EXCESS SOIL MUST BE REMOVED FROM THE SITE BY THIS CONTRACTOR.
2 INCLUDE ALL INTERIOR STONE BASE AND STONE FOR THE COVERED GAZEBO.
3 ANY UNDERGROUND UTILITY EXCAVATING SHALL BE BY THE MECHANICAL/ELECTRICAL CONTRACTOR.

1 EARTHWORK:
A DESCRIPTION OF WORK:
1 SOIL AND EROSION CONTROL.
2 STRIP AND STOCKPILE TOPSOIL/RE-SPREAD IN GRASS AREAS/FINE GRADE AND SEED ALL DISTURBED AREAS.
3 LAYOUT AND MAINTAINING OF GRADE ELEVATIONS PER SITE DRAWINGS.
4 EXCAVATE AND BACKFILL FOR FOOTINGS, TRENCHES, AND OTHER REQUIRED EXCAVATIONS.
5 CUT AND FILL AS REQUIRED PER SITE DRAWINGS.
6 BACKFILL AS REQUIRED AND COMPACT TO 95% AT BUILDING AREAS, 100% AT PAVED AREAS.
7 STONE BASE UNDER BUILDING SLAB AND SIDEWALKS, SEE DRAWINGS.
8 STONE BASE, MACADAM PAVING AND LINE STRIPING AS INDICATED ON SITE DRAWINGS.
9 LANDSCAPING (TREES AND SHRUBS AS SHOWN ON SITE DRAWINGS).
10 STABILIZED CONSTRUCTION ENTRANCE.
11 STATE OR TOWN HIGHWAY ENTRANCE.
12 COMPACTION TESTING AT ALL FILL AREAS OVER 18".
13 STORM WATER PIPING AND RELATED WORK.
14 DOMESTIC WATER PIPING AND SPRINKLER PIPING RELATED WORK.
B UTILITIES:
1 WHETHER INDICATED OR NOT, PROTECT EXISTING UTILITIES WHEN ENCOUNTERED. SUCH UTILITIES SHALL CONSIST OF ACTIVE SEWERS (STORM AND SANITARY), WATER, GAS, ELECTRIC, OR OTHER UTILITY SERVICES AND/OR STRUCTURES. WHEN INACTIVE UTILITIES ARE ENCOUNTERED, DETERMINATION SHALL BE MADE AS TO THEIR PERMANENT INACTIVITY. IF PERMANENTLY INACTIVE, SUCH UTILITY MAY BE PLUGGED OR CAPPED SO AS NOT TO INTERFERE WITH PROPER EXECUTION OF WORK.
2 THE EXCAVATING CONTRACTOR AND ANY OTHER CONTRACTOR INTENDING TO EXCAVATE OR GRADE SOILS MUST CALL, CALL 811 AT LEAST 3-10 DAYS BEFORE WORK CAN COMMENCE, THE NUMBER IS 1-800-962-7962 OR 811
C CLASSIFICATION:
1 EXCAVATION UNDER THIS CONTRACT IS CLASSIFIED AS BEING EITHER EARTH OR ROCK. EXCAVATION INCLUDES ALL MATERIALS ENCOUNTERED IN THE EXCAVATION WORK. MATERIALS CLASSIFIED AS ROCK SHALL BE PAID AS AN EXTRA TO THE CONTRACT, FOR REMOVAL AS SPECIFIED.
2 PROVIDE UNIT COSTS FOR TRENCH ROCK AND BULK ROCK REMOVAL.
3 ROCK SHALL BE DEFINED AS FOLLOWS:
A ROCK EXCAVATION INCLUDES REMOVAL AND DISPOSAL OF ROCK MATERIAL AND OBSTRUCTIONS ENCOUNTERED THAT CANNOT BE REMOVED BY THE FOLLOWING HEAVY-DUTY ROCK EXCAVATING EQUIPMENT WITHOUT SYSTEMATIC DRILLING OR RIPPING.
B ROCK INCLUDES BOULDERS 1/2 CU. YD. OR MORE IN VOLUME AND ROCK IN BEDS, LEDGES, UNSTRATIFIED MASSES AND CONGLOMERATE DEPOSITS.
C ROCK EXCAVATING EQUIPMENT FOR OPEN EXCAVATIONS SHALL BE EQUIVALENT TO CATERPILLAR MODEL NO. 963, HEAVY DUTY, TRACK-MOUNTED LOADER, RATED AT NOT LESS THAN 160 HP FLYWHEEL POWER AND DEVELOPING MINIMUM OF 45,000 LB. BREAKOUT FORCE, MEASURED ACCORDING TO SAE STANDARDS J732-C-69.
D ROCK EXCAVATING EQUIPMENT FOR ALL OTHER EXCAVATION SHALL BE EQUIVALENT TO CATERPILLAR MODEL NO. 330, HYDRAULIC TRACK HOE, RATED AT NOT LESS THAN 222 HP FLYWHEEL POWER AND DEVELOPING MINIMUM OF 45,000 LB. BREAKOUT FORCE, MEASURED ACCORDING TO SAE STANDARDS J732-C-69.
E EXCAVATIONS MORE THAN 10 FEET IN WIDTH AND PITS MORE THAN 30 FEET IN EITHER LENGTH OR WIDTH ARE DEFINED AS OPEN EXCAVATIONS.
F ROCK EXCAVATION WILL BE PAID BY UNIT PRICES INCLUDED IN THE CONTRACT DOCUMENTS.
G DO NOT EXCAVATE ROCK UNTIL IT HAS BEEN CLASSIFIED AND CROSS-BY SECTIONED BY THE OWNER AGENT.
D EXCAVATION:
1 REMOVE MATERIAL OF EVERY DESCRIPTION ENCOUNTERED IN OBTAINING LINES AND GRADES AS SHOWN. ASSUME THAT ALL MATERIAL CAN BE REMOVED BY HAND TOOLS OR POWER SHOVELS (BACKHOE OR LADDER WITH RIPPER).
2 THE GENERAL CONTRACTOR WILL HAVE THE CIVIL ENGINEER VERIFY THAT ALL SITE WORK IS COMPLETED PER THE SITE DRAWINGS AND SPECIFICATIONS. ANY CORRECTIONS OR MODIFICATIONS WILL BE MADE BY THE SITE CONTRACTOR IN ORDER TO RECEIVE CERTIFICATION.
E SHORING:
1 ALL EXCAVATION FOR FOOTINGS AND TRENCHES SHALL BE PROPERLY SHORED AS REQUIRED BY OSHA, AND LOCAL, COUNTY, OR STATE CODES AS APPLICABLE, AND SHALL BE IN ACCORDANCE WITH SUCH REQUIREMENTS.

2 PUBLIC SEWER EXTENSION:
A DESCRIPTION OF WORK:
1 CONSTRUCT NEW PUBLIC SEWER EXTENSION AS INDICATED ON PLANS BY OTHERS AND IN ACCORDANCE WITH SEWER AUTHORITY.
2 INSTALL NEW SEWER LATERAL AS SHOWN ON PLANS TO WITHIN 5'-0" OF BUILDING FOR PLUMBING CONTRACTOR CONNECTION.

2 SEWER SYSTEM:
A DESCRIPTION OF WORK:
1 ON SITE SEWER SYSTEM WILL BE DESIGNED AND CONSTRUCTED BY THE G.C. THIS SITE CONTRACTOR SHALL STAKE OUT THE ON-SITE SYSTEM AND KEEP HIS AND ALL OTHER TRADES OFF OF THIS DESIGNATED AREA.

2 SEWER LATERAL:
A DESCRIPTION OF WORK:
1 INSTALL NEW SEWER LATERAL AS SHOWN ON PLANS BY OTHERS TO WITHIN 5'-0" OF BUILDING FOR PLUMBING CONTRACTOR CONNECTION.
2 FURNISH SIZE AND TYPE OF PIPING INDICATED ON THE SITE DRAWINGS.

3 UNDERGROUND GAS LINE:
A DESCRIPTION OF WORK:
1 INSTALL NEW GAS LINE AS SHOWN ON PLANS TO WITHIN 5'-0" OF BUILDING FOR PLUMBING CONTRACTOR CONNECTION.

4 DOMESTIC AND SPRINKLER WATER LINES:
A DESCRIPTION OF WORK:
1 INSTALL WATER METER PIT VERIFY LOCATION TO MEET SPECIFICATIONS OF LOCAL WATER AUTHORITY, INCLUDING BACKFLOW PREVENTORS, PIPING AND CONNECTIONS.

5 MACADAM PAVING:
A DESCRIPTION OF WORK:
1 ALL PAVING SHALL BE IN ACCORDANCE WITH THE SITE DRAWINGS.
2 PAVE ALL NEW AUTOMOBILE PAVING, TRUCK PAVING AND STATE OR TOWN PAVING AS INDICATED ON THE SITE DRAWINGS.
3 INSTALL NEW WEARING SURFACE OVER EXISTING PARKING LOT AS SHOWN.
4 NEW STATE OR TOWN. ENTRANCE PER SITE DRAWINGS.
5 ALL REQUIRED LINE STRIPING.
6 PATCH/REPAIR EXISTING PAVED AREAS AT LOCATION OF TEMPORARY CONSTRUCTION ENTRANCE, AT COMPLETION OF PROJECT.
B MATERIALS:
1 USE LOCALLY AVAILABLE MATERIALS AND GRADATIONS WHICH EXHIBIT A SATISFACTORY RECORD OF PREVIOUS INSTALLATION.
2 PAVING SPECIFICATION AS INDICATED ON SITE DRAWINGS.
3 STONE BASE - SEE SITE DRAWINGS
4 BINDER COURSE - SEE SITE DRAWINGS
5 WEARING COURSE - SEE SITE DRAWINGS
C INSTALLATION:
1 PROOF ROLL PREPARED SUB-SURFACE TO CHECK FOR UNSTABLE AREAS AND REQUIREMENT FOR ADDITIONAL COMPACTION.
2 NOTIFY GENERAL CONTRACTOR OF UNSATISFIED CONDITIONS. DO NOT BEGIN STONE BASE WORK UNTIL SUCH CONDITIONS HAVE BEEN CORRECTED.
3 STONE BASE SHALL BE ROLLED AND COMPACTED IN ACCORDANCE WITH PLAN GRADES.
4 MACADAM PAVING AS SHOWN AND DETAILED ON PLANS.

6 STORM WATER:
A DESCRIPTION OF WORK:
1 SITE CONTRACTOR TO PROVIDE AND INSTALL ALL RECEIVER FITTINGS FOR ALL DOWNSPOUTS. RECEIVERS TO EXTEND TO 8" ABOVE FINISHED GRADE, WHERE REQUIRED.
2 ALL STORM WATER PIPING TO BE SIZE AS INDICATED ON THE SITE DRAWINGS.
3 SITE CONTRACTOR TO MAKE FINAL CONNECTIONS BETWEEN STORM WATER LINE AND RECEIVERS AND STORM WATER LINE AND ROOF DRAIN LEADERS. (LEADERS AND ROOF DRAINS BY PLUMBING CONTRACTOR)

7 CONCRETE CURBING:
A DESCRIPTION OF WORK:
1 ALL CONCRETE CURBING SHALL BE IN ACCORDANCE WITH THE SITE DRAWINGS.

8 LANDSCAPING:
A DESCRIPTION OF WORK:
1 PROVIDE AND INSTALL TREES AND SHRUBS OF CALIBER AND VARIETIES AS INDICATED ON DRAWINGS.
B LANDSCAPING MATERIALS:
1 PLANTS SHALL BE HEALTHY MATURE SAMPLES.
C LANDSCAPING INSTALLATIONS:
1 INSTALL TREES AND SHRUBS AS DETAILED ON PLANS INCLUDING BACKFILL MATERIAL, ANCHORING, TRUNK WRAPS, AND FLAGGING.
2 ALL TREES AND SHRUBS SHALL BE WARRANTED FOR A FULL 12 MONTHS OR AS REQUIRED BY SITE DRAWINGS.
D FINE GRADING AND SEEDING:
1 THE EXTENT OF FINE GRADING AND SEEDING WILL BE LIMITED TO ALL AREAS DISTURBED BY CONSTRUCTION WORK.
2 RE-GRADE AND RE-SEED ALL AREAS THAT DO NOT ACHIEVE THE GROWTH OF MATURE GRASS DUE TO ENVIRONMENTAL ISSUES (I.E. WATER RUN-OFF, WASH-OUT, ETC.). THE ACHIEVEMENT OF MATURE GRASS TO BE DETERMINED BY GENERAL CONTRACTOR.
3 RE-SEED ALL THIN AND BARE AREAS AND MAINTAIN BY FERTILIZING, WATERING, AND MOWING UNTIL SUCH TIME AS A MATURE STAND OF GRASS IS ACHIEVED THROUGHOUT.
E FINE GRADING AND SEEDING MATERIALS:
1 MULCH: STRAW MULCH SHALL BE THRESHED STRAW OF WHEAT FREE FROM MATURED SEED OR OBNOXIOUS WEEDS OR SPECIES DETRIMENTAL TO DEVELOPMENT OF SPECIFIED GRASS SEED OR PAPER TYPE MULCH USED WITH HYDRO SEEDING EQUIPMENT OR AS REQUIRED BY THE LOCAL MUNICIPALITY.
2 SEED: SEED FOR ALL AREAS SHALL BE 100% PENN. STATE MIX OR EQUAL . RATE OR APPLICATION SHALL BE 6-8 LBS/1000 SQ.FT. SEED SHALL BE 98% PURE LIVE SEED BY WEIGHT. WEED SEED SHALL NOT EXCEED 0.5% BY WEIGHT. SEED SHALL BE DELIVERED TO SITE IN SEALED, ORIGINAL CONTAINERS WHICH SHOW AN ANALYSIS OF THE SEED MADE BY APPROVED AUTHORITY OR AS REQUIRED BY SITE DRAWINGS.
3 APPLY MESH OR OTHER MATERIAL TO PREVENT AND CONTROL RUTS OR WASHOUT. THIS IS THE SITE CONTRACTORS RESPONSIBILITY.

DIVISION 3 CONCRETE (ALSO REFER TO STRUCTURAL NOTES ON STRUCTURAL DRAWINGS STRUCTURAL NOTES SHALL SUPERSEDE SPECIFICATIONS)

CONCRETE:
1 CONCRETE:
A DESCRIPTION OF WORK:
1 FURNISH ALL LABOR, MATERIALS AND EQUIPMENT TO PROPERLY INSTALL ALL PLAIN AND REINFORCED CONCRETE AS INDICATED ON THE DRAWINGS AND/OR HEREIN. INCLUDED ALSO IS THE FURNISHING AND INSTALLATION OF ALL SCAFFOLDING, RUNWAYS, FORMS, REINFORCING STEEL, FIBER MESH, BOLTS, INSERTS, ANCHORS, SLEEVES, REINFORCING ACCESSORIES, AND ALL EMBEDDED ITEMS.
B MATERIALS:
1 CONCRETE DESIGN MIX FOR ALL SLABS AND FOUNDATIONS IS TO BE 3,000 PSI AT 28 DAYS EXCEPT EXTERIOR CONCRETE EXPOSED TO FREEZE\THAW CONDITIONS SHALL BE 4,000 PSI AT 28 DAYS.
2 SLUMP SHALL MEASURE FROM 1 1/2" TO 3" FOR CONCRETE PLACED WITH MECHANICAL VIBRATION AND FROM 4" TO 6" WHEN MEASURED BY STANDARD METHODS IN ACCORDANCE WITH ASTM C143.
3 AIR ENTRAINMENT FOR EXTERIOR WALKS, RAMPS, AND STEPS SHALL RANGE FROM 4% TO 6%.
4 ALL FLAT SURFACES, INTERIOR AND EXTERIOR CONCRETE PADS AND WALKS TO HAVE W.W.F. 6x6-2.9/2.9 (6GA) IN 4" SLABS. UNLESS NOTED OTHERWISE ON THE DRAWINGS.
2 CONCRETE REINFORCEMENT:
A DESCRIPTION OF WORK:
1 CONCRETE REINFORCEMENT AS REQUIRED FOR STRUCTURAL DESIGN AND AS SHOWN ON THE DRAWINGS.
2 REINFORCING LAPS ARE TO BE 40 BAR DIAMETERS (24" MIN)
B MATERIALS:
1 INTERMEDIATE GRADE DEFORMED BARS OF NEW BILLET STEEL CONFORMING TO ASTM A615 GRADE 60.
3 CONCRETE ACCESSORIES:
A DESCRIPTION OF WORK:
1 CONCRETE ACCESSORIES TO FACILITATE PROPER INSTALLATION OF ALL CONCRETE.
B MATERIALS:
1 PRE MOLDED EXPANSION MATERIAL: 1/2" BY FULL SLAB THICKNESS.
2 VAPOR BARRIER: 6 MIL CLEAR POLYETHYLENE FILM, PLACED BETWEEN STONE BASE AND FLOOR SLAB.
3 SEALER: SONNEBORN "CURE-N-SEAL" WATER BASE TYPE OR EQUAL, PLACE ON ALL CONCRETE SLABS.
C PLACEMENT:
1 PLACE CONCRETE BY BEST METHOD POSSIBLE. COORDINATE WITH PLUMBING AND ELECTRICAL CONTRACTOR TO DETERMINE BEST WAY.
2 SLOPE ALL INTERIOR SLABS WITH FLOOR DRAINS TOWARD DRAIN 1/8":12.
3 SLOPE ALL EXTERIOR PADS AWAY FROM THE BUILDING 1/4":12.

DIVISION 4 MASONRY (ALSO REFER TO STRUCTURAL NOTES ON STRUCTURAL DRAWINGS STRUCTURAL NOTES SHALL SUPERSEDE SPECIFICATIONS)

1 MASONRY:
A DESCRIPTION OF WORK:
1 FURNISH ALL LABOR, MATERIALS AND INCIDENTALS AS REQUIRED TO ERECT ALL EXTERIOR FOUNDATION BLOCK. INTERIOR AND EXTERIOR MASONRY FOUNDATION WALLS AND PARTITIONS.
2 FURNISH ALL LABOR, MATERIALS AND INCIDENTALS AS REQUIRED TO ERECT ALL EXTERIOR FOUNDATION BLOCK, BRICK VENEER, INTERIOR AND EXTERIOR MASONRY FOUNDATION WALLS AND PARTITIONS. COORDINATE ACTUAL ELEVATIONS WITH SITE GRADING PLAN FOR EXTENT OF EXPOSED MASONRY VENEER.
3 FURNISH ALL LABOR, MATERIALS AND INCIDENTALS AS REQUIRED TO ERECT ALL INTERIOR LOAD AND NON-LOAD BEARING MASONRY PARTITIONS.
4 THIS CONTRACTOR SHALL ALSO BUILD IN AND GROUT AS NECESSARY ALL MATERIALS FURNISHED BY OTHERS WHICH BECOME PART OF GENERAL MASONRY INCLUDING BUT NOT LIMITED TO STRUCTURAL MEMBERS, LOOSE LINTELS, DOOR FRAMES, WINDOWS, REINFORCING BARS, FLASHING, CAVITY WALL INSULATION, ELECTRICAL CONDUITS, SLEEVES, INSERTS, PVC VENTILATION, ANCHORS, SCUPPERS, ACCESS DOORS, ETC.
5 MASON IS RESPONSIBLE FOR ANY AND ALL BRACING AND/OR PROTECTION TO ENSURE WALLS DO NOT MOVE OR FALL.
6 INSTALL ALL VERTICAL REINFORCING AND GROUT CORES SOLID WHERE INDICATED ON THE DRAWINGS. VERTICAL WALL REINFORCING TO BE SUPPLIED BY GENERAL CONTRACTOR OR MASONRY CONTRACTOR.
7 FURNISH AND INSTALL HORIZONTAL JOINT REINFORCING AT 1'-4" O.C. ABOVE GRADE AREAS.
8 FURNISH AND INSTALL THROUGH-WALL FLASHING AND WEEP HOLES WHERE INDICATED ON THE DRAWINGS AND ALSO AT ALL EXTERIOR OPENINGS. (INCLUDING, BUT NOT LIMITED TO DOORS, WINDOWS, BOTTOM OF MASONRY VENEER, MECHANICAL OPENINGS, ETC..) ALL OF THE RECOMMENDATIONS IN THE NCMA (NATIONAL CONCRETE MASONRY ASSOCIATION) TEK TECHNICAL SERIES FOR THIS MASONRY SYSTEM MUST BE FOLLOWED AND INCLUDED IN THIS PROJECT. (WHETHER STATED ON THE DRAWINGS AND SPECS OR NOT).

B MATERIALS:
1 CONCRETE BLOCK, COMMERCIALLY MADE, PROPERLY CURED AND AGED BY A REPUTABLE MANUFACTURER.
2 MORTAR MIX FOR MASONRY WORK SHALL BE ONE PART PORTLAND CEMENT ASTM C150 TYPE 1; ONE PART HYDRATED LIME ASTM C270 TYPE S; FIVE PARTS SAND BY VOLUME.
3 MORTAR FOR USE BELOW GRADE SHALL CONFORM TO ASTM C270, TYPE M OR N.
4 SAND SHALL CONFORM TO ASTM SPECIFICATION C144 OF UNIFORM COLOR THROUGHOUT THE PROJECT.
5 NO DAMAGED, CHIPPED, BLEMISHED OR OTHERWISE INFERIOR MASONRY UNITS ARE TO BE USED.
6 INTERMEDIATE GRADE DEFORMED BARS OF NEW BILLET STEEL CONFORMING TO ASTM A615 GRADE 60.
7 RUBBERIZED THRU-WALL FLASHING AS INTENDED FOR SUCH USE AT LOCATIONS INDICATED ON THE DRAWINGS AND ALSO AT ALL EXTERIOR OPENINGS. (INCLUDING, BUT NOT LIMITED TO DOORS, WINDOWS, BOTTOM OF MASONRY VENEER, MECHANICAL OPENINGS, ETC..). ALL OF THE RECOMMENDATIONS IN THE NCMA (NATIONAL CONCRETE MASONRY ASSOCIATION) TEK TECHNICAL SERIES FOR THIS MASONRY SYSTEM MUST BE FOLLOWED AND INCLUDED IN THIS PROJECT. (WHEATHER STATED ON THE DRAWINGS AND SPECS OR NOT). FLASHING TO EXTEND 8" BEYOND MASONRY OPENING ON EACH SIDE AND EXTEND UP 4" ON EACH SIDE TO CREATE AN END DAM.
8 GALVANIZED TRIANGULAR SHAPED JOINT REINFORCING TO MATCH WIDTH OF WALL AT 1'-4" ON CENTER, HORIZONTAL AT ALL MASONRY WALLS, ABOVE GRADE AREAS.
C INSTALLATION:
1 MASONRY WORK SHALL BE PERFORMED BY SKILLED EXPERIENCED CRAFTSMAN WITHIN THE FOLLOWING TOLERANCES: VARIATION FROM PLUMB-VERTICAL WALLS 1/4" IN 10'-0", EXTERIOR CORNERS 1/4" IN 20'-0" VARIATION FROM LEVEL-SILLS, LINTELS, HORIZONTAL GROOVES 1/4" IN 20'-0", FOR TOP SURFACE OF BEARING WALLS 1/8" IN 10'-0".
2 ALL MASONRY PARTITIONS TO EXTEND TIGHT TO CONSTRUCTION ABOVE, UNLESS NOTED OTHERWISE.
3 ALL JOINTS IN BLOCK AND BRICK TO BE STRUCK WITH TOOL AND POINTED AS NEEDED TO FILL ANY VOIDS.
4 ALL FACE BRICK/BLOCK SHALL BE CLEANED AFTER INSTALLATION IN ACCORDANCE WITH ALL APPLICABLE ASTM SPECIFICATIONS.
5 MASON SHALL PROVIDE CONTROL JOINTS AS SHOWN ON DRAWINGS, BUT IN NO CASE SHALL MASONRY EXTEND MORE THAN 30'-0" HORIZONTALLY WITHOUT CONTROL JOINT. (SUBJECT TO APPROVAL WITH ARCHITECT). SEALANT COLOR SHALL BE APPROVED BY ARCHITECT OR OWNER.

DIVISION 5 STEEL (ALSO REFER TO STRUCTURAL NOTES ON STRUCTURAL DRAWINGS. STRUCTURAL NOTES SHALL SUPERSEDE SPECIFICATIONS)

1 MISCELLANEOUS METALS AND STRUCTURAL STEEL:
A DESCRIPTION OF WORK:
1 PROVIDE ALL ITEMS, ARTICLES, MATERIALS, ACCESSORIES, OPERATIONS METHODS LISTED, MENTIONED, SHOWN, OR SCHEDULED ON THE DRAWINGS AND/OR HEREIN SPECIFIED; INCLUDING ALL LABOR, SUPERVISION, MATERIALS, EQUIPMENT, AND INCIDENTALS NECESSARY AND REQUIRED FOR THE COMPLETION OF ALL MISCELLANEOUS METAL WORK ON THIS PROJECT SUCH AS, BUT NOT LIMITED TO, LOOSE LINTELS, PIPE RAILINGS, ANCHOR BOLTS, LEVELING PLATES, SLEEVES, PIPE BOLLARDS, INSERTS, ETC.
2 THE CONTRACTOR SHALL CAREFULLY EXAMINE ALL DRAWINGS INCLUDING DRAWINGS OF OTHER CONTRACTORS ON THIS PROJECT TO COORDINATE AND PROVIDE PROPER CLEARANCES FOR ALL WORK; INCLUDING THE PROMPT DELIVERY OF SUCH ITEMS WHICH WILL REQUIRE BUILDING IN BY OTHERS ON THIS PROJECT WITHOUT CAUSING DELAY TO SCHEDULED CONSTRUCTION.
3 ALL STRUCTURAL AND MISCELLANEOUS STEEL SHALL CONFORM TO THE NINTH EDITION OF THE AISC "SPECIFICATIONS FOR THE DESIGN, FABRICATION AND ERECTION OF STRUCTURAL STEEL FOR BUILDINGS" AND TO THE AISC "CODE OF STANDARD PRACTICE FOR STEEL BUILDINGS AND BRIDGES".
4 ALL STEEL SHALL CONFORM TO ASTM 36 UNLESS NOTED OTHERWISE.
5 SHOP AND FIELD WELDS SHALL BE MADE BY CERTIFIED WELDERS AND SHALL CONFORM TO THE AWS CODE FOR BUILDINGS.
6 ALL BOLTED AND WELDED CONNECTIONS TO BE TESTED AND APPROVED BY A THIRD PARTY TESTING SUPPLIED BY THE STEEL CONTRACTOR. ANY CORRECTIONS OR MODIFICATIONS TO THE CONNECTIONS TO BE COMPLETED BY THE STEEL CONTRACTOR.
B SUBMITTAL:
1 SUBMIT STEEL SHOP DRAWINGS TO THE G.C. NO STEEL WILL BE FABRICATED UNTIL THE SHOP DRAWINGS ARE APPROVED.

DIVISION 6 CARPENTRY AND COUNTER TOPS/MILLWORK
(ALSO REFER TO STRUCTURAL NOTES ON STRUCTURAL DRAWINGS.
STRUCTURAL NOTES SHALL SUPERSEDE SPECIFICATIONS)

1 CARPENTRY:
A DESCRIPTION OF WORK:
1 WORK OF THIS SECTION INCLUDES ALL LABOR, MATERIALS, EQUIPMENT AND SERVICES NECESSARY FOR AND INCIDENTAL TO THE INSTALLATION OF ALL WOOD FRAMING, BLOCKING, SHEATHING AND MISCELLANEOUS WOOD BLOCKING REQUIRED TO COMPLETE THE BUILDING. LUMBER IS TO BE FIT IN A WORKMAN LIKE MANNER, COPED OR SCRIBED, TO FIT ADJACENT WORK TO THE BEST DEGREE POSSIBLE.
1 CARPENTRY:
A DESCRIPTION OF WORK:
1 WORK OF THIS SECTION INCLUDES ALL LABOR, MATERIALS, EQUIPMENT AND SERVICES NECESSARY FOR AND INCIDENTAL TO THE INSTALLATION OF ALL MISCELLANEOUS WOOD FRAMING AND BLOCKING AND SHEATHING REQUIRED TO COMPLETE THE BUILDING. LUMBER IS TO BE FIT IN A WORKMAN LIKE MANNER, COPED OR SCRIBED, TO FIT ADJACENT WORK TO THE BEST DEGREE POSSIBLE.
B LUMBER:
1 ALL DIMENSIONAL LUMBER SHALL BE SPF #2 SELECT OR BETTER-U.N.O.. LUMBER SHALL BE DRESSED (S4S) UNLESS OTHERWISE NOTED OR SPECIFIED. LUMBER IS TO COMPLY WITH THE "AMERICAN SOFTWOOD LUMBER STANDARD" PS 20 BY THE U.S. DEPARTMENT OF COMMERCE.
2 PARALLAM BEAMS SHALL BE PARALLEL STRAND LUMBER (PSL) IN SIZES AS INDICATED ON THE DRAWINGS. PARALLAMS AS MANUFACTURED iLEVEL (TJI) SPECIFICATIONS, AS MANUFACTURED BY WEYERHAEUSER OR APPROVED EQUAL.
iLEVEL by WEYERHAEUSER
PHONE: 888-iLEVEL8 (888-453-8358) EMAIL: ilevel@weyerhaeuser.com
3 PARALLAM BEAMS SHALL BE LAMINATED VENEER LUMBER (LVL) IN SIZES AS INDICATED ON THE DRAWINGS. PARALLAMS AS MANUFACTURED BY iLEVEL (TJI) SPECIFICATIONS, AS MANUFACTURED BY WEYERHAEUSER OR APPROVED EQUAL.
4 PARALLAM OR MICROLAM BEAMS SHALL BE LAMINATED VENEER LUMBER (PSL OR LVL) IN SIZES AS INDICATED ON THE DRAWINGS. PARALLAMS BY iLEVEL (TJI) , AS MANUFACTURED BY WEYERHAEUSER OR APPROVED EQUAL.
5 PRE-ENGINEERED WOOD TRUSSES SHALL BE SIZES AND SHAPES SHOWN ON PLANS. FINAL DESIGN SIZES ARE SUBJECT TO MANUFACTURER TO PROVIDE 'SEALED' ENGINEERING DOCUMENTS FOR EACH TRUSS DESIGN. SUBMIT TRUSS SHOP DRAWINGS TO THE G.C.
6 PLYWOOD ROOF SHEATHING SHALL BE 5/8" CDX PLYWOOD WITH "H" CLIPS.
7 PLYWOOD FOR WALL SHEATHING SHALL BE 1/2" OSB. UNLESS NOTED OTHERWISE ON THE DRAWINGS.
8 PLYWOOD FLOOR SHEATHING SHALL BE 3/4" ADVANTECH T&G PLYWOOD SUBFLOORING OR EQUAL.
9 PLYWOOD FOR BACKBOARDS FOR ELECTRICAL PANELS TO BE 3/4" MINIMUM 3-PLY.
10 MULTIPLY UNDERLAYMENT 1/4" (NOT LUAN) FOR ROOM(S) WITH VINYL SHEET FLOORING.
11 ALL LUMBER IN CONTACT WITH CONCRETE OR MASONRY SHALL BE PRESSURE TREATED, WOLMAN SALTS 0.30 OR BETTER.
C STORAGE:
1 KEEP ALL LUMBER DRY DURING DELIVERY AND STORAGE. PROTECT AGAINST EXPOSURE TO WEATHER AND CONTACT WITH DAMP AND WET SURFACES. STACK WORK LUMBER AND PLYWOOD, AND PROVIDE AIR CIRCULATION WITHIN STACKS.
2 COUNTER TOPS/MILLWORK:
A DESCRIPTION OF WORK: (SEE ALSO INTERIOR DRAWINGS FOR REQ'D FINISHES)
1 FURNISH LABOR, MATERIALS AND EQUIPMENT REQUIRED TO COMPLETE INSTALLATION OF MILLWORK ITEMS AS SHOWN ON DRAWINGS AND HEREIN DESCRIBED. ALL CABINETS ARE TO MEET OR EXCEED AWI CUSTOM GRADE AS SPECIFIED IN THE LATEST AWI WOODWORKING QUALITY STANDARDS.
2 FURNISH LABOR, MATERIALS AND EQUIPMENT REQUIRED TO COMPLETE INSTALLATION OF ALL MILLWORK / CASEWORK.
ITEMS AS SHOWN ON DRAWINGS AND HEREIN DESCRIBED TO MATCH SAMPLE PROVIDED BY OWNER. ALL PAINT GRADE WOOD TRIM, BASE, MOLDINGS, ETC. WHERE INDICATED ON THE DRAWINGS.
3 PROVIDE HARDWARE SAMPLES AND CABINET COLORS TO TENANT AND ARCHITECT FOR APPROVAL.
B) MATERIALS: (SEE INTERIOR DESIGN DRAWINGS)
1 THE EXTENT OF MILLWORK IS SHOWN ON THE ARCHITECTURAL DRAWINGS AND SHALL INCLUDE ALL MATERIAL AS SET FORTH IN THE DRAWINGS AND SPECIFICATIONS.
2 LAMINATED PLASTIC TOP SHALL BE 3/4" MEDIUM DENSITY PARTICLE BOARD, WITH MINIMUM 1/16" THICK HIGH-PRESSURE PLASTIC LAMINATE BONDED TO ALL EXPOSED SURFACES OF PARTICLE BOARD WITH WATER-RESISTANT GLUE. TOP SHALL HAVE BACK AND END SPLASHES OF SAME CONSTRUCTION AND COLOR. FRONT EDGE OF TOP SHALL HAVE LAMINATE EXTENDED DOWN, OVER APPLIED THICKENED EDGE TO GIVE TOP APPEARANCE OF 1 1/2" THICKNESS. COLOR AND PATTERN OF LAMINATE TO BE SELECTED BY THE OWNER.
3 ALL MILLWORK, CASEWORK AND RUNNING TRIM TO MEET A.W.I. CUSTOM QUALITY STANDARDS.
4 INTERIOR STANDING AND RUNNING TRIM TO MEET OR EXCEED A.W.I. SECTION 1500 CUSTOM GRADE: FACTORY FINISHING T-11 CONVERSION VARNISH- WOOD SPECIES: AS INDICATE ON THE DRAWINGS.
5 INTERIOR STANDING AND RUNNING TRIM FOR OPAQUE FINISH TO MEET: SECTION 1500 CUSTOM GRADE FACTORY FINISHING - WOOD SPECIES: CLOSED GRAIN, HARDWOOD REFERENCED IN ABOVE SECTION.
6 NUMBER OF DRAWERS AND SHELVES PER UNIT ARE TO BE AS SHOWN ON THE ARCHITECTURAL DRAWINGS.
7 PROVIDE FULL HEIGHT BACKSPLASH AND SIDESPLASH AT ALL COUNTER TO WALL INTERSECTION, UNLESS NOTED OTHERWISE ON THE DRAWINGS.
8 ALL EXPOSED SURFACES TO HAVE LAMINATED PLASTIC FACE / EDGINGS.

9 CABINET HARDWARE: (SEE ALSO INTERIOR DESIGN DRAWINGS)
CONCEALED HINGES: MAUF. STANDARD
WIRE PULLS: ON ALL DOORS AND DRAWERS, FINISH AS SELECTED BY ARCHITECT.
DRAWER GLIDES: MANUF. STANDARD, MEDIUM DUTY WITH MINIMUM 75 LBS. CLASS.
BASE CABINET ROLLER GLIDES: MAUF. STANDARD HEAVY DUTY WITH MINIMUM 100 LBS. CLASS
10 MELAMINE SHELVING: SHALL BE ADJUSTABLE SHELVING UNITS AS SHOWN ON THE ARCHITECTURAL DRAWINGS.
C INSTALLATION:
1 ROUGH AND FINISH CARPENTRY: ALL ROUGH AND FINISHED CARPENTRY WORK SHALL BE INSTALLED IN A FIRST CLASS WORKMANLIKE MANNER ACCORDING TO DIMENSIONS AND DETAILS; VERTICAL, LEVEL, TRUE AS REQUIRED. ALL CUTS SHALL BE SQUARE AND PLUMB, AND ALL JOINTS TIGHTLY MADE WITHOUT WEDGES OR CHIPS, WHETHER CONCEALED OR NOT.
D DELIVERY AND STORAGE:
1 DELIVERY AND STORAGE SHALL BE DONE IN ACCORDANCE TO MANUFACTURER'S INSTRUCTIONS, SPECIAL CARE WILL BE TAKEN TO ENSURE THAT MILLWORK AND COUNTER TOPS ARE NOT DAMAGED ON THE JOB SITE. TEMPORARILY PROTECT, INSTALLED MILLWORK AND COUNTER TOPS UNTIL ACCEPTED BY OWNER AND GENERAL CONTRACTOR.
E CLEAN-UP:
1 CLEAN UP AND REMOVE FROM SITE, RUBBISH, SCRAP MATERIALS AND DEBRIS CAUSED BY THIS WORK. LEAVE ALL AREAS OF WORK BROOM CLEAN.

DIVISION 7 THERMAL AND MOISTURE

SEE AIR LEAKAGE - THERMAL ENVELOPE TESTING REQUIREMENTS BELOW 1

1 INSULATION:
A RELATED SECTIONS:
1 SEE DIVISION 4 MASONRY FOR SPRAYED FOAM, MASONRY CORE INSULATION.
B DESCRIPTION OF WORK:
1 ALL WORK AND MATERIALS RELATED TO THERMAL, SOUND AND PERIMETER INSULATION AS SHOWN OR SPECIFIED, NOT OTHERWISE REFERENCED ABOVE.
2 THERMAL FIBERGLASS INSULATION BETWEEN BOTTOM CHORD OF WOOD TRUSSES IN SIZES AS SHOWN ON THE DRAWINGS.
3 COMPLETE INSULATION OF AREAS INDICATED AND AS SPECIFIED HEREIN. INSULATION SHALL BE INSTALLED ONLY WHEN CONSTRUCTION HAS ADVANCED TO THE POINT THAT REMAINING CONSTRUCTION OPERATIONS WILL NOT DAMAGE THE INSULATION. WHERE ELECTRIC OUTLETS, DUCTS, PIPES, VENTS OR OTHER UTILITY ITEMS OCCUR, INSULATION SHALL BE PLACED ON THE COLD OR WEATHER SIDE OF ITEM.
B MATERIALS:
1 SOUND-BATT INSULATION: PROVIDE IN ALL METAL AND WOOD FRAMED INTERIOR WALLS. UP TO THE STRUCTURE ABOVE. SEE DIVISION 9 FINISHES.
A TYPE: UN-FACED GLASS FIBER ACOUSTICAL INSULATION COMPLYING WITH ASTM C 665, TYPE 1 WITH A GLASS FIBER MAT SEPTUM FOR 1 HOUR RATED PARTITIONS.
B COMBUSTION CHARACTERISTICS: PASSES ASTM E 136 TEST.
C SURFACE BURNING CHARACTERISTICS: MAXIMUM FLAME SPREAD IN 10, MAXIMUM SMOKE DEVELOPED IS 10 WHEN TESTED IN ACCORDANCE WITH ASTM.
D FIRE RESISTANCE RATINGS: PASSES ASTM E 119 TEST (REFER TO UL DESIGN NUMBER U468, TYPE FB.)
E SOUND TRANSMISSION: SOUND TRANSMISSION CLASS MUST CALCULATED FOR TOTAL WALL CONSTRUCTION. STC RATINGS ARE SHOWN ON THE DRAWINGS.
2 SOUND BOARD:
A SHALL BE SOUND-A-SOTE, CELLULOSE FIBER COMPOSITION BOARD BY HOMASOTE COMPANY OR AS APPROVED EQUAL. SOUND BOARD SHALL BE INSTALLED IN AREAS AS INDICATED ON THE DRAWINGS AND ACCORDANCE WITH MANUFACTURER'S INSTRUCTIONS.
3 THERMAL INSULATION:
A SHALL BE KRAFT PAPER LINED FIBERGLASS IN THICKNESS AND LOCATIONS AS INDICATED ON DRAWINGS.
B SHALL BE PLASTIC SCRIM FACED FIBERGLASS IN THICKNESS AND LOCATIONS AS REQUIRED TO OBTAIN R-VALUE, INDICATED ON THE DRAWINGS.
4 RIGID ROOF INSULATION:
A. SHALL BE POLYISOCYANURATE IN THICKNESS TO PROVIDE A MINIMUM R-VALUE OF 30.
A. SHALL BE TAPERED POLYISOCYANURATE IN THICKNESS REQUIRED TO PROVIDE ROOF TAPERS AS INDICATED ON THE DRAWINGS. ALL TAPERS SHALL BE MINIMUM 1/8":12. INSULATION TO PROVIDE A MINIMUM R-VALUE OF 30.
5 PERIMETER INSULATION:
A SHALL BE EXTRUDED POLYSTYRENE FOAM INSULATION; SQUARE EDGES; 2" THICK X 24" WIDE X LENGTH REQUIRED. THE R VALUE SHALL BE 5.0 PER INCH OR THICKNESS (5-YEAR AGED VALUE) ASTM C518. WATER ABSORPTION SHALL NOT EXCEED 0.1% BY VOLUME, IN ACCORDANCE WITH ASTM C272,. DENSITY SHALL BE NOMINAL #/CU/FT COMPLY WITH ASTM C578, TYPE IV. SHALL BE "STYROFOAM SM" AS MANUFACTURED BY DOW CHEMICAL OR BY U.C. INDUSTRIES OR EQUAL. INSTALL AT PERIMETER OF FOUNDATION WALL AND FLOOR SLAB, MINIMUM 2'-0" EACH WAY UNLESS NOTED OTHERWISE ON THE DRAWINGS.
6 NAIL BASE INSULATION:
A SHALL BE 3.0" NOMINAL THICKNESS R VALUE 19.0 CONSISTING OF DOUBLE 7/16" W ORIENTED STRUCTURAL BOARD (OSB) BONDED WITH 2.49" OF POLYISOCYANURATE FOAM CORE FOR INSTALLATION OVER LAMINATED ROOF DECK.
7 COMPOSITION SHINGLES:
A DESCRIPTION OF WORK:
1 WORK TO INCLUDE ALL SHINGLE ROOFING AS INDICATED ON PLANS.
2 ALL MISCELLANEOUS ACCESSORIES BUT NOT LIMITED TO 15# FELT UNDERLAYMENT, 50# ICE AND WATER SHIELD, 50# VALLEY FLASHING, ALUMINUM DRIP EDGE AND FLASHING, CONTINUOUS RIDGE VENT, SKYLIGHT AND VENT THRU ROOF FLASHING, FASTENERS, MASTIC, ETC...

AIR LEAKAGE - THERMAL ENVELOPE TESTING (SECTION C402.5)

THE BUILDING THERMAL ENVELOPE SHALL BE TESTED IN ACCORDANCE WITH ASTM E 779 AT A PRESSURE DIFFERENTIAL OF 0.3 INCH WATER GAUGE (75 PA) OR AN EQUIVALENT METHOD APPROVED BY THE CODE OFFICIAL AND DEEMED TO COMPLY WITH THE PROVISIONS OF THIS SECTION WHEN THE TESTED AIR LEAKAGE RATE OF THE BUILDING THERMAL ENVELOPE IS NOT GREATER THAN 0.40 CFM/FT2 (0.2 L/s - m2). WHERE COMPLIANCE IS BASED ON SUCH TESTING, THE BUILDING SHALL ALSO COMPLY WITH SECTIONS C402.5.5, C402.5.6 & C402.5.7.

TESTING DATA SHALL BE SUBMITTED TO THE B.C.O. BY THE TESTING FIRM USED FOR THE AIR LEAKAGE TEST

1

B MATERIALS:
1 SHINGLES SHALL BE CERTAINTEED XT25, CLASS A ASPHALT, FIBERGLASS BASE, 235 LBS/SQ. ACCORDANCE WITH ASTM D225 TYPE III, WITH A 25 YEAR WARRANTY. COLOR SHALL BE SELECTED BY ARCHITECT.
2 PRESTIQUE II-HIGH DEFINITION DIMENSIONAL SHINGLES. CLASS A ASPHALT, FIBERGLASS BASE. IN ACCORDANCE WITH ASTM D3462. WITH A 25 YEAR WARRENTY. COLOR SHALL BE SELECTED BY ARCHITECT.
3 15# ASPHALT IMPREGNATED FELT PAPER AND 50# ASPHALT BASE ICE AND WATER SHIELD SIMILAR TO WINTER GUARD BY CERTAINTEED.
3 CONTINUOUS RIDGE VENT SHALL BE 'METAL-ERA HI-PERF RIDGE VENT' OR EQUAL.
C INSTALLATION:
1 COMPLETE ROOFING SHALL TAKE PLACE ONLY WHEN CONSTRUCTION HAS ADVANCED OPERATIONS AND WHEN LARGE ENOUGH AREAS ARE READY FOR ROOFING SO THAT OPERATIONS DO NOT HAVE TO STOP AND START.
2 WORK SHALL BE COMPLETED BY AN EXPERIENCED MECHANIC IN ACCORDANCE WITH ALL MANUFACTURERS RECOMMENDATIONS AND PROVIDED WITH A MINIMUM 5 YEAR INSTALLATION WARRANTY, IN ADDITION TO MANUFACTURER'S MATERIAL WARRANTY.
8 METAL ROOFING:
A DESCRIPTION OF WORK:
1 STANDING SEAM METAL ROOF BY FABRAL OR EQUAL
A DESCRIPTION OF WORK:
1 WORK TO INCLUDE ALL METAL ROOFING AS INDICATED ON DRAWINGS.
2 ALL MISCELLANEOUS ACCESSORIES BUT NOT LIMITED TO ALUMINUM DRIP EDGE AND FLASHING, VENT THRU ROOF FLASHING, FASTENERS, MASTIC, ETC.
B MATERIALS:
1 MECHANICALLY SEAMED 22 GAUGE, STANDING SEAM ROOF SYSTEM WITH SEAMS AT 2'-0" ON CENTER, OR EQUAL.
METAL ROOFING SHALL BE FABRAL, 29 GA. GALVANIZED STEEL. COLOR SHALL BE DARK BRONZE
2 FURNISH AND INSTALL ALL COMPONENTS, ACCESSORIES, TRIM, FLASHING, RIDGE CAPS, FASCIA, RAKE TRIM, GUTTERS AND DOWNSPOUTS. HVAC UNIT CURBS, ALL FLASHING, ECT. TO PROVIDE A COMPLETE AND WEATHER TIGHT ROOFING SYSTEM.
3 FINISH ON STANDING SEAM METAL ROOF, RIDGE CAP AND FLASHING TO BE MANUF. STANDARD "GALVALUME.

C INSTALLATION:
1 COMPLETE ROOFING SHALL TAKE PLACE ONLY WHEN CONSTRUCTION HAS ADVANCED OPERATIONS AND WHEN LARGE ENOUGH AREAS ARE READY FOR ROOFING SO THAT OPERATIONS DO NOT HAVE TO STOP AND START.
2 WORK SHALL BE COMPLETED BY AN EXPERIENCED INSTALLER IN ACCORDANCE WITH ALL MANUFACTURERS RECOMMENDATIONS AND PROVIDED WITH A MINIMUM 5 YEAR INSTALLATION WARRANTY, IN ADDITION TO MANUFACTURER'S MATERIAL WARRANTY.

9 GUTTERS, DOWNSPOUTS, FASCIA, TRIM AND COPING CAPS:
A DESCRIPTION OF WORK:
1 PROVIDE ALL GUTTERS, DOWNSPOUTS, FASCIA, TRIM AND COPING CAPS WHERE INDICATED OR NOTED ON THE DRAWINGS, IF NOT INDICATED OR NOTED AS REQUIRED TO COMPLETE WEATHER TIGHTNESS OF THE BUILDING, EXCEPT, GUTTERS, DOWNSPOUTS, FASCIA, TRIM AS PART OF THE PRE-ENGINEERED BUILDING ARE BY PRE-ENGINEERED BUILDING SUPPLIER.
B MATERIALS:
1 ALL METAL WORK TO BE MINIMUM 0.050 ALUMINUM BREAK METAL WITH KYNAR FINISH. COLOR TO BE SELECTED BY THE ARCHITECT.
2 SIZE, SHAPES, ECT. TO BE AS INDICATED ON THE DRAWINGS. IF NOT INDICATED, AS REQUIRED TO PROVIDE A WEATHER TIGHT BUILDING AND TO CONCEAL SUBSTRATES.
C INSTALLATION:
1 ALL WORK TO BE PERFORMED BY PERSONS EXPERIENCED IN TYPE OF METALS WORK AS INDICATED ON THE DRAWINGS.
2 INSTALL ALL WORK ACCORDING TO DETAILS ON THE DRAWINGS. IF NOT DETAILED ACCORDING TO STANDARD AND RECOMMENDED PRACTICES.
3 PROVIDE CONTINUOUS CLEATS AT ALL DRIP EDGES.
4 INSTALL ALL METAL WORK AS TO ALLOW FOR EXPANSION AND CONTRACTION OF METAL WORK AND TO PREVENT OIL CANNING.
5 ALL METALS WORK TO BE COORDINATED WITH OTHER WORK, SUCH AS ROOFING, FLASHING, MASONRY, WOOD BLOCKING, ETC.

10 MEMBRANE ROOFING:
A DESCRIPTION OF WORK:
1 PROVIDE AND INSTALL ALL FULLY ADHERED MEMBRANE ROOFING AS SHOWN ON THE PLANS, INCLUDING RECOVERY BOARD, RIGID INSULATION, ADHESIVE, ALL REQUIRED TRIM PIECES, DRIP-EDGE, CANT STRIPS AND MISCELLANEOUS COMPONENTS REQUIRED TO COMPLETE THE INSTALLATION, IN ORDER TO PROVIDE ROOF MANUFACTURER'S TOTAL SYSTEM WARRANTY. (FURNISH WARRANTY LITERATURE)
B MATERIALS:
1 USE 60 MIL FULLY ADHERED SYSTEM ON TAPERED INSULATION SYSTEM MECHANICALLY FASTENED TO METAL ROOF DECK.
2 MEMBRANE, RIGID INSULATION, FASTENERS, ADHESIVE, JOINT SEALANT, FLASHINGS, TAPES, ECT. ALL BY EPDM MANUFACTURER, IN ORDER TO PROVIDE ROOF MANUFACTURER TOTAL SYSTEM WARRANTY.
3 PRODUCTS SHALL BE CARLISLE, FIRESTONE OR APPROVED EQUAL.
4 ALUMINUM TRIM COLOR AS INDICATED ON THE DRAWINGS
C INSTALLATION:
1 COMPLY WITH CURRENT PRINTED MANUFACTURER'S INSTRUCTIONS FOR PREPARATION OF SUBSTRATE TO RECEIVE ELASTOMERIC SHEET ROOFING.
2 REMOVE TRASH AND DEBRIS RESULTING FROM ROOFING WORK AT END OF EACH DAY.
3 UPON COMPLETION OF THE ROOFING SYSTEM, AN AUTHORIZED MANUFACTURER'S REPRESENTATIVE WILL MAKE AN INSPECTION OF THE INSTALLATION FOR FINAL ACCEPTANCE AND TO ISSUE THE TOTAL SYSTEM ROOF WARRANTY.
11 MEMBRANE FLASHING:
A DESCRIPTION OF WORK:
1 PROVIDE AND INSTALL ALL FULLY ADHERED MEMBRANE FLASHING AT PARAPETS.

B INSTALLATION:
1 COMPLY WITH CURRENT PRINTED MANUFACTURER'S INSTRUCTIONS FOR PREPARATION OF SUBSTRATE TO RECEIVE ELASTOMERIC SHEET FLASHING.
2 REMOVE TRASH AND DEBRIS RESULTING FROM ROOFING WORK AT END OF EACH DAY.

12 FIBER-CEMENT SIDING:
A DESCRIPTION OF WORK:
1 INSTALL ALL FIBER-CEMENT SIDING AND TRIM PRODUCTS AS SHOWN ON PLANS INCLUDING BUT NOT LIMITED TO HORIZONTAL AND VERTICAL SIDING, CORNER TRIM, AS WELL AS ALL ALUMINUM SOFFIT, FASCIA, GUTTER, DOWN SPOUTS AND ALUMINUM WRAPPED FRIEZE AS DETAILED.
B MATERIALS:
1 FIBER-CEMENT SIDING SHALL BE AS MANUFACTURED BY HARDIEPLANK.

C INSTALLATION:
1 INSTALL ALL SIDING AND TRIM ACCORDING TO ALL MANUFACTURER'S RECOMMENDATIONS IN A FIRST-CLASS WORKMANLIKE MANNER. PROVIDE SEALANT OR CAULKING AT ALL GAPS, CRACKS AND SEAMS AS REQUIRED IN A COLOR TO MATCH THE MATERIAL.

12A WOOD SIDING:
PROVIDE OPTION TO USE LP SMARTSIDE TRIM & SIDING. MATCH COLORS SHOWN ON ELEVATIONS.

13 EIFS:
A DESCRIPTION OF WORK:
1 COMPLETE INSTALLATION OF WEATHER PROTECTION MATERIAL, EXPANDED POLYSTYRENE INSULATION BOARD INTENDED FOR USE IN EXTERIOR ROOF INSULATION FINISH SYSTEMS (EIFS) AND BASE AND FINISH COATS AT AREAS INDICATED ON THE DRAWINGS.
2 EIFS SHALL BE INSTALLED ONLY WHEN CONSTRUCTION OPERATIONS WILL NOT DAMAGE THE EIFS.
B MATERIALS:
1 EXTERIOR INSULATION AND FINISH SYSTEM (EIFS) EQUAL TO "DRYVIT" OR EQUAL. SHALL CONSIST OF BUT NOT LIMITED TO INSULATION BOARD, ADHESIVE AND/OR MECHANICAL ATTACHMENT OF THE INSULATION BOARD TO THE SUBSTRATE, AN INTEGRALLY REINFORCED BASE COAT ON THE FACE OF THE INSULATION BOARD, A PROTECTIVE FINISH APPLIED TO THE SURFACE OF THE BASE COAT AND APPLICABLE ACCESSORIES THAT INTERACT TO FORM AN ENERGY EFFICIENT, WEATHER PROOF EXTERIOR WALL.
2 "TYVEK" STUCCO WRAP, MECHANICALLY FASTENED TO SHEATHING. OVERLAP SPLICE LOCATIONS (JOINTS) AND BACK WRAP ALL OPENINGS AND PENETRATIONS ACCORDING TO MANUFACTURER'S WRITTEN INSTRUCTIONS.
3 INSULATION BOARD SHALL BE FORMED BY STEAM EXPANSION OF POLYSTYRENE RESIN BEADS IN A CLOSED MOLD. THE INSULATION BOARD SHALL BE OF UNIFORM DENSITY AND HAVING ESSENTIALLY CLOSED CELLS. INSULATION BOARD SHALL CONTAIN SUFFICIENT FLAME RETARDANTS TO MEET THE OXYGEN INDEX, FLAMMABILITY AND SMOKE DEVELOPMENT REQUIREMENTS. THICKNESS AS INDICATED ON THE DRAWINGS.
4 EIFS SYSTEM SHALL BE DRYVIT OUTSULATION SYSTEM WITH STANDARD PLUS MESH OR APPROVED EQUAL.
5 FINISH SHALL BE AS INDICATED ON THE DRAWINGS.
6 AREAS WITHIN 6'-0" OF GRADE SHALL BE INSTALLED W/ "PANZER MESH" FOR PUNCTURE RESISTANCE.
C INSTALLATION:
1 INSTALLATION WILL BE PERFORMED IN STRICT ACCORDANCE WITH MANUFACTURER'S WRITTEN INSTRUCTIONS BY WORKMAN EXPERIENCED IN THIS TRADE AND PERFORMED IN A WORKMANLIKE MANNER.

FINAL DRAWINGS

HEX 9 ARCHITECTS
ARCHITECTURE · PLANNING
An LLC Company
5427 Woodside Drive
Gap, PA 17527
(717) 442-9034
(717) 283-0097 fx
JOSEPH TURNOWCHYK, AIA, NCARB

STATE OF NEW YORK REGISTRATION # 036357-1

ALL CONTRACTORS ARE TO VERIFY ALL DIMENSIONS, FIELD CONDITIONS AND THE WORK OF OTHER TRADES BEFORE PROCEEDING WITH THEIR WORK.

This drawing is the exclusive property of HEX 9 ARCHITECTS and may not be reproduced in any form without written authorization from HEX 9 ARCHITECTS. Unauthorized reproduction or use of any or all parts of this drawing will constitute a violation of U.S. copyright laws.

COPYRIGHT © 2018 HEX 9 ARCHITECTS ALL RIGHTS RESERVED

REVISIONS

NUMBER	DATE	REVISED BY
1	6-01-2018	RN

DATE	FEBRUARY 6, 2018
DRAWN BY	CMT
PROJECT NUMBER	16114

NEW FACILITY FOR:
SLEEP INN & SUITES CHOICE PROPERTY I.D. # NY701
635 ELMIRA ROAD
ITHACA, NEW YORK 14850
ARCHITECTURAL SPECIFICATIONS

A701
DRAWING NUMBER

I:\2016\16114 SLEEP INN - ITHACA, NY\PRODUCTION\A701-A702 ARCH SPECS.DWG 05-31-18 9:37 AM PRINTED BY: USER06

DIVISION 7 THERMAL AND MOISTURE (cont.)

14 ADHERED MANUFACTURED STONE VENEER:
A DESCRIPTION OF WORK:
1 COMPLETE INSTALLATION OF THE ADHERED MANUFACTURED STONE VENEER AT THE AREAS INDICATED ON THE DRAWINGS.
2 ADHERED MANUFACTURED STONE VENEER TO BE INSTALLED ONLY WHEN CONSTRUCTION OPERATIONS WILL NOT DAMAGE THE STONE VENEER FINISH.
B MATERIALS:
1 ADHERED MANUFACTURED STONE VENEER EQUAL TO "ELDORADO STONE" OR EQUAL. SHALL CONSIST OF BUT NOT LIMITED TO DENSGLASS EXTERIOR SHEATHING, 2 LAYERS OF TYVEC STUCCO BUILDING WRAP, WIRE LATH, MORTAR SCRATCH COAT, FOUNDATION WEEP SCREED/FLASHINGS.
2 "TYVEC" STUCCO WRAP MECHANICALLY ATTACHED TO SHEATHING, OVERLAP SPLICE LOCATIONS (JOINTS) AND BACKWRAP ALL OPENINGS AND PENETRATIONS ACCORDING TO MANUFACTURERS WRITTEN INSTRUCTIONS.
3 MORTAR SCRATCH COAT IS TO BE APPLIED DIRECTLY TO THE LATH OR SUBSTRATE TO WHICH ADHERED MANUFACTURED STONE VENEER SYSTEM ARE ADHERED TO.
C INSTALLATION:
1 INSTALLATION WILL BE PERFORMED IN STRICT ACCORDANCE WITH MANUFACTURERS WRITTEN INSTRUCTIONS, BY WORKMAN EXPERIENCED IN THIS TRADE AND PERFORMED IN A WORKMANLIKE MANNER.
2 REFER TO THE LATEST ADDITION OF 'MASONRY VENEER MANUFACTURERS ASSOCIATION' (MVMA) INSTALLATION GUIDE FOR ADHERED STONE VENEER. (COMPLIANCE WITH ASTM-C1780)

15 ICE/SNOW GUARDS: (FURNISHED BY G.C. INSTALL BY METAL BUILDING ERECTOR)
A DESCRIPTION OF WORK:
1 INSTALL ALL ICE/SNOW GUARDS AS SHOWN ON PLANS.
B MATERIAL:
1 ICE/SNOW GUARDS SHALL BE CONTINUOUS ON PORTE COCHERE (VERIFY MANUFACTURER) MATCH ROOF COLOR
C INSTALLATION:
1 INSTALLATION OF ICE/SNOW GUARDS TO BE COMPLETED BY ROOFING CONTRACTOR. INSTALL ALL ICE/SNOW GUARDS TO MANUFACTURER'S RECOMMENDATIONS IN A FIRST-CLASS WORKMANLIKE MANNER.

17 COPOLYMER SHUTTERS & WINDOW HEADS:
A DESCRIPTION OF WORK:
1 INSTALL ALL SHUTTERS & WINDOW HEADS AS SHOWN ON PLANS.
B MATERIAL:
1 SHUTTERS & WINDOW HEADS SHALL BE MAINTENANCE-FREE COPOLYMER CONSTRUCTION WITH MOLDED-THROUGH COLOR AND 40 YEAR TRANSFERABLE WARRANTY BY MID-AMERICA BUILDING PRODUCTS, PLYMOUTH, MICHIGAN OR APPROVED EQUAL, COLOR: CREAM.
C INSTALLATION:
1 INSTALL ALL SHUTTERS & WINDOW HEADS TO MANUFACTURER'S RECOMMENDATIONS IN A FIRST-CLASS WORKMANLIKE MANNER. PROVIDE SEALANT OR CAULKING AT ALL GAPS, CRACKS AND SEAMS AS REQUIRED IN A COLOR TO MATCH THE MATERIAL.

DIVISION 8 DOORS AND WINDOWS

1 HOLLOW METAL:
A DESCRIPTION OF WORK:
1 FURNISH ALL LABOR, EQUIPMENT AND MATERIALS, AND IN PERFORMING ALL OPERATIONS IN CONNECTION WITH INSTALLATION OF HOLLOW METAL DOORS AND FRAMES AS SHOWN. ALL HOLLOW METAL FRAMES IN MASONRY WALLS SHALL BE WELDED FRAMES. PROVIDE RATED FRAMES WHERE INDICATED ON THE DRAWINGS.
B MANUFACTURERS:
HOLLOW METAL MANUFACTURERS:
CURRIE, PIONEER, REPUBLIC OR APPROVED EQUAL.
C CLEARANCES:
EDGE CLEARANCES SHALL BE PROVIDED AS FOLLOWS: BETWEEN DOORS AND FRAME, AT HEAD AND JAMBS 1/8". AT DOOR SILLS: WHERE NO THRESHOLD IS USED -3/8" MAXIMUM, WHERE THRESHOLD IS USED -3/4" MAXIMUM ABOVE FINISHED FLOOR, WHERE CARPET IS USED -3/8" ABOVE CARPET. BETWEEN MEETING EDGES OF PAIRS OF DOORS -1/8".
D HARDWARE LOCATIONS:
THE LOCATIONS OF HARDWARE ON DOORS AND FRAMES SHALL BE AS FOLLOWS:
HINGES:
TOP ----------- 5" FROM HEAD OF FRAME TO TOP OF HINGE.
BOTTOM -------- 10" FROM FINISHED FLOOR TO BOTTOM OF HINGE.
INTERMEDIATE ----- CENTERED BETWEEN TOP AND BOTTOM HINGES.
LOCKS AND LATCHES:
UNIT AND INTEGRAL TYPE 38" TO CENTERLINE OF KNOB FROM FINISHED FLOOR.
DEADLOCKS: 60" TO CENTERLINE OF CYLINDER FROM FINISHED FLOOR.
PANIC HARDWARE: 38" TO CENTERLINE OF CROSSBAR FROM FINISHED FLOOR.
DOOR PULLS: 42" TO CENTER OF GRIP FROM FINISHED FLOOR.

2 STEEL DOORS:
A DESCRIPTION OF WORK:
1 THE WORK OF THIS SECTION WILL INCLUDE THE FURNISHING AND INSTALLATION OF ALL STEEL ENTRANCE DOORS AS SHOWN ON THE DRAWINGS.
B MATERIALS:
1 DOORS ARE TO BE MANUFACTURED USING 18 GAUGE GALVANIZED STEEL SHEETS BOTH SIDES. STEEL FACES SHALL BE SUFFICIENTLY SEPARATED SO AS NOT TO ALLOW THERMAL TRANSMISSION BETWEEN THE TWO STEEL FACES EVEN AFTER THE INSTALLATION OF HINGES AND MORTISED LOCK SET.
2 CORE SHALL BE POLYURETHANE FOAM. CORE SHALL BE FOAMED IN PLACE SO AS TO COMPLETELY FILL IN AREA AND BOND THE STILES, RAILS AND FACES INTO A SOLID PANEL.
3 WOOD DOORS AND FRAMES:
A DESCRIPTION OF WORK:
1 THE WORK OF THIS SECTION WILL INCLUDE THE FURNISHING AND INSTALLATION OF ALL WOOD DOORS AS SHOWN ON THE DRAWINGS, PRE-MACHINED FOR ALL HARDWARE.
B MATERIALS:
1 SOLID CORE WOOD DOORS 1 3/4" THICK PARTICLE CORE, AT DOORS WITHOUT A FIRE RATING. MAUF. STANDARD MINERAL CORE AT FIRE RATED DOORS. AT RATED DOORS PROVIDE SUFFICIENT WOOD BLOCKING FOR ALL DOOR HARDWARE. RATED DOORS ARE TO HAVE UNDERWRITERS LABORATORY RATING PLATE ON THEM. DOORS BY MOHAWK OR EQUAL.
2 ALL WOOD DOORS SHALL BE HUNG IN METAL FRAMES C TYPE 18 GA. CLIP ON, BY CURRIES, FENESTRA OR EQUAL.
3 ALL FIRE RATED WOOD DOORS SHALL BE HUNG IN METAL FRAMES C TYPE 20 GA. CLIP ON, BY CURRIES, FENESTRA OR EQUAL.
C INSTALLATION:
1 INSTALL DOORS AND FRAMES IN A WORKMANLIKE MANNER.
4 ALUMINUM DOORS, WINDOWS AND FRAMES:
A DESCRIPTION OF WORK:
1 FURNISH AND INSTALL ALL EXTERIOR ALUMINUM DOORS, TRANSOMS AND FRAMES AS SHOWN ON THE DRAWINGS
2 SAFETY/INSULATING GLAZING IN ALL UNITS.
3 ALL RELATED HARDWARE WITH EXCEPTION OF LOCK CYLINDERS. (COORDINATE WITH HARDWARE SUPPLIER)
B MATERIALS:
1 ALUMINUM MEMBERS: ALLOY AND TEMPER RECOMMENDED BY MANUFACTURER FOR STRENGTH. CORROSION RESISTANCE AND APPLICATION OF REQUIRED FINISH, ASTM B 221 FOR EXTRUSIONS, ASTM B 209 FOR SHEET OR PLATE, AND ASTM B 211 FOR BARS, RODS AND WIRE.
2 ALL INTERIOR AND EXTERIOR ALUMINUM DOORS AND FRAMES WHERE REQUIRED TO BE ANODIZED SYSTEM, COLOR SHALL BE SELECTED BY ARCHITECT.
2 ALL INTERIOR AND EXTERIOR ALUMINUM DOORS AND FRAMES TO BE FLUOROCARBON 2-COAT, THERMO-CURED SYSTEM, COLOR SHALL BE SELECTED BY ARCHITECT.
3 MANUFACTURERS, BUT NOT LIMITED TO: ATLAS ARCH. METALS INC., YKK AP AMERICA INC., KAWNEER INC., (TRIFAB 451T THERMAL FRAMING)
4 AUTOMATIC SLIDING DOOR SYSTEM AT MAIN ENTRY TO BE "DURA-GLIDE 2000P-PANEL WITH SU-050 MICROWAVE SENSOR SAFETY SYSTEM AS MANUFACTURED BY STANLEY OR APPROVED EQUAL.
C INSTALLATION:
1 COMPLY WITH ALL MANUFACTURER'S INSTRUCTIONS AND RECOMMENDATIONS FOR INSTALLATION.
2 SET UNITS PLUMB LEVEL AND TRUE TO LINE.
3 SEPARATE DISSIMILAR METALS WITH BITUMINOUS PAINT OR A SUITABLE SEALANT, OR A NONABSORPTIVE PLASTIC OR ELASTOMERIC TAPE BETWEEN SURFACES.
4 CAULK OR SEAL AT PERIMETER OF ALL FRAMES.

5 VINYL CLAD WOOD WINDOWS:
A DESCRIPTION OF WORK:
1 PROVIDE ALL LABOR AND MATERIAL FOR THE PROPER INSTALLATION OF THE WOOD WINDOWS AS DESCRIBED ON THE DRAWINGS AND BY THE WINDOW SCHEDULE.
B MATERIALS:
1 WINDOWS SCHEDULED ARE BASED ON ANDERSEN, VINYL CLAD, WOOD WINDOWS FIXED DOUBLE HUNG FOR GUEST ROOMS & CORRIDORS.
2 WOOD SUB-FRAME, WATER REPELLENT PRESERVATIVE TREATED.
3 EXTERIOR EXPOSED SURFACES ARE TO BE COVERED WITH RIGID VINYL (PVC), WEATHERSTRIP APPLIED. PINE STOPS AND MULLION CASINGS FURNISHED WITH EACH UNIT.
4 STAINLESS STEEL HINGES-ZINC DIE-CAST CASE SASH LOCKS. UNDER SCREEN ROTO-OPERATOR, STONE COLOR FINISH, STEEL ARMS, ZINC AND DICHROMARE PLATING, ZINC DIE-CAST BASE AND HANDLE. ENGINEERED PLASTIC OPERATOR COVERS.
C INSTALLATION:
1 INSTALLATION WILL BE PERFORMED IN STRICT ACCORDANCE WITH MANUFACTURER'S WRITTEN INSTRUCTIONS BY WORKMAN EXPERIENCED IN THIS TRADE AND PERFORMED IN A WORKMANLIKE MANNER.

6 FINISH HARDWARE:
A DESCRIPTION OF WORK:
1 FURNISHING OF ALL FINISH AND BUILDER'S HARDWARE AND RELATED ITEMS REQUIRED TO COMPLETE THE WORK INDICATED ON THE DRAWINGS EXCEPT ONLY SUCH HARDWARE AS IS SPECIFICALLY INCLUDED AS PART OF EQUIPMENT ON WORK UNDER OTHER DIVISIONS.
2 THE DRAWINGS MUST BE CAREFULLY EXAMINED AND STUDIED TO DETERMINE QUANTITIES AND TYPE OF HARDWARE REQUIRED FOR THE COMPLETE AND ENTIRE JOB. EXCEPT FOR THOSE ITEMS OF HARDWARE SPECIFICALLY FURNISHED UNDER OTHER DIVISIONS, ALL ITEMS OF HARDWARE REQUIRED IN CONJUNCTION WITH THE COMPLETE PROJECT SHALL BE FURNISHED AND INSTALLED UNDER THIS DIVISION WHETHER OR NOT SUCH HARDWARE IS SPECIFICALLY CALLED FOR.
3 WORK DESCRIBED AS FINISH HARDWARE MUST COMPLY WITH 2009 U.C.C. CODE, AMERICANS WITH DISABILITIES ACT (ADA) AND ALL OTHER APPLICABLE BUILDING CODES.
B MATERIALS:
1 A FULL AND COMPLETE HARDWARE SCHEDULE WILL BE SUBMITTED, TO THE GENERAL CONTRACTOR IN TRIPLICATE, BY THE SUPPLIER. APPROVAL OF THE HARDWARE SCHEDULE IN NO WAY RELEASES THE SUPPLIER FROM THE REQUIREMENTS FOR FURNISHING COMPLETE HARDWARE FOR ALL PURPOSES NECESSARY IN COMPLETION OF THE PROJECT.
2 LABEL ALL HARDWARE WITH THE DOOR NUMBER ON THE HARDWARE CONTAINERS.
THE REQUIRED TYPES OF HARDWARE AND MANUFACTURERS INCLUDE THE FOLLOWING:

ITEM	MANUFACTURER
BUTTS AND HINGES	STANLEY, HAGER, MCKINNEY
LOCK CYLINDERS AND KEYS	PDQ
LOCK AND LATCH SETS	PDQ
PANIC EXIT DEVICES	ARROW
PUSH-PULL EXITS	ROCKWOOD, IVES
CLOSERS	DORMA
SILENCERS	GLYNN JOHNSON
WEATHER STRIPPING AND SEALS	REESE, PEMKO (OR APPROVED EQUAL) FOR EXTERIOR DOORS
THRESHOLDS	REESE, PEMKO (OR APPROVED EQUAL)
CARD READERS	ILCO BY KABO - GENERATION E-760

C KEYING:
1 COORDINATE KEYING WITH OWNER AND HARDWARE REPRESENTATIVE.
2 PROVIDE THREE (3) KEYS FOR EACH LOCK, KEYS TO BE TAGGED WITH DOOR, AND ROOM NUMBER AND DESCRIPTION.
7 GLASS FOR DOORS:
A DESCRIPTION OF WORK:
1 WORK TO INCLUDE ALL LABOR, MATERIALS AND EQUIPMENT TO INSTALL THE GLASS IN SPECIFIED DOORS AS SHOWN ON THE DRAWINGS.
2 PROVIDE GLASS PEEP HOLES AS INDICATED ON THE DRAWINGS.

DIVISION 9 FINISHES

1 GYPSUM WALL BOARD AND METAL SUPPORT SYSTEM:
A DESCRIPTION OF WORK:
1 FURNISH ALL LABOR AND MATERIALS AND ACCESSORIES TO COMPLETE ALL GYPSUM BOARD WORK INCLUDING BUT NOT LIMITED TO GLUE, SCREWS, MISCELLANEOUS VINYL TRIMS AT CORNER AND TOP OF WALLS, METAL CORNER BEAD, ETC.
2 ALL OF THE RECOMMENDATIONS AS PUBLISHED BY THE UNITED STATES GYPSUM COMPANY MUST BE FOLLOWED AND INCLUDED IN THIS PROJECT (WHETHER STATED ON THE DRAWINGS AND SPECS OR NOT).
B MATERIALS:
1 DRYWALL IS TO BE 5/8" FIRE CODE OR 5/8" GYPSUM WALL BOARD THROUGHOUT WITH TAPERED EDGES, TAPED WITH "PAPER" TAPE AND SPACKLED, READY TO PAINT.
2 METAL SUPPORT MATERIALS SHALL BE 25 GA ST SERIES STEEL STUDS OF THICKNESS INDICATED WITH ALL REQUIRED FLOOR AND CEILING RUNNERS AND CLIPS, SHOES, TIES FASTENERS, AND OTHER ACCESSORIES NEEDED FOR A COMPLETE STUD SYSTEM, MANUFACTURED BY UNITED STATES GYPSUM CO. OR APPROVED EQUAL.
3 SOUND CONTROL-FIBERGLASS BATTS AND SOUND BOARD AS DESCRIBED IN DIVISION 7.
C INSTALLATION:
1 ALL WORK SHALL BE EXECUTED BY SKILLED AND EXPERIENCED MECHANICS IN A FIRST CLASS WORKMANLIKE MANNER AND SHALL BE DONE AS RAPIDLY AS COMPLETION OF ANY SECTION OF WORK MAY PERMIT.
2 WHERE VINYL COVE BASE AND/OR WOOD BASE IS USED-DRYWALL TO BE FINISHED TIGHT TO THE FLOOR.
3 REMOVE ALL DRYWALL RELATED DEBRIS, INCLUDING SCRAPING FLOORS AND OTHER SURFACES OF EXCESS JOINT COMPOUND AND DUST TO BE VACUUMED AND REMOVED.
4 WALLS TO BE FINISHED SMOOTH AND WIPED WITH DAMP TOWEL, READY FOR PAINTING.
5 PATCH WALLS AS MAY BE REQUIRED AFTER FIRST COAT OF PAINT AND ALLOW FOR REASONABLE TOUCH-UP AT CONCLUSION OF THE PROJECT.
6 ALL STUD PARTITIONS TO EXTEND TIGHT TO CONSTRUCTION ABOVE, UNLESS NOTED OTHERWISE.
7 ALL GYPSUM BOARD TO STOP 1" FROM STRUCTURE ABOVE TO ALLOW FOR ANY COMPRESSION OR EXPANSION OF THE FRAMING SYSTEM.

4 RESILIENT FLOORING: SEE ALSO INTERIOR DESIGN DRAWINGS
A DESCRIPTION OF WORK:
1 THIS SECTION SHALL INCLUDE THE FURNISHING OF ALL LABOR AND MATERIALS FOR THE INSTALLATION OF VINYL COMPOSITION TILE FLOORING (VCT).
B MATERIALS:
1 VINYL COMPOSITION TILE SHALL BE FIRST QUALITY MATERIAL 1/8" THICK AND COMPOSED OF A THOROUGHLY BLENDED COMPOSITION OF THERMOPLASTIC BINDERS, RESINS, PIGMENTS AND FILLER FORMED UNDER PRESSURE WHILE HOT, AND CUT TO SIZE. TILE SHALL BE SQUARED WITH CALENDARED SURFACE AND SHALL MEET FEDERAL SPECIFICATIONS SS-T-312 B(1), TYPE IV, COMP. 1.
2 TILE SHALL BE 1'-0" X 1'-0" STANDARD EXCELON AS MANUFACTURED BY ARMSTRONG WORLD INDUSTRIES, INC.
3 ADHESIVES AND RELATED PRODUCTS TO BE A RECOMMENDED BY VCT MANUFACTURERS.
C INSTALLATION:
1 ALL WORK SHALL BE EXECUTED BY SKILLED AND EXPERIENCED MECHANICS IN A FIRST-CLASS WORKMANLIKE MANNER AND SHALL BE DONE AS RAPIDLY AS COMPLETION OF ANY SECTION OF WORK MAY PERMIT.
2 LEAVE UNUSED PORTIONS OF OPENED BOXES OF TILE AT SITE, NO LESS THAN 10 PIECES OF EACH COLOR.
3 PREPARE, FLASH AND PATCH FLOORS AS REQUIRED FOR A FIRST-CLASS FINISHED PRODUCT.

6 CARPET: SEE INTERIOR DESIGN DRAWINGS.
A DESCRIPTION OF WORK:
1 THE WORK CONSISTS OF FURNISHING ALL LABOR, MATERIALS, EQUIPMENT, SERVICES AND SUPERVISION REQUIRED IN PERFORMING ALL OPERATIONS FOR THE INSTALLATION OF CARPET IN STRICT ACCORDANCE WITH THIS SPECIFICATION.
2 CARPET INSTALLER SHALL BE RESPONSIBLE FOR TAKING ALL PROPER FIELD DIMENSIONS AND CHECKING CONDITIONS AT BUILDING NECESSARY FOR COMPLETE AND PERFECT INSTALLATION IN ALL RESPECTS.
B MATERIALS:
1 ALL CARPET SHALL BE 28 OZ. SOLUTION DYED NYLON WITH POLYPROPYLENE BACK. SELECTED BY ARCHITECT OR OWNER.
2 ADHESIVES AND RELATED PRODUCTS TO BE AS RECOMMENDED BY CARPET MANUFACTURER.
3 LEAVE REMNANTS OF USABLE SIZES AT THE SITE PER OWNER'S CHOICE. ALL OTHER MATERIALS TO BE REMOVED FROM SITE BY THIS SUBCONTRACTOR.
C INSTALLATION:
1 ALL WORK SHALL BE EXECUTED BY SKILLED AND EXPERIENCED MECHANICS IN A FIRST CLASS WORKMANLIKE MANNER AND SHALL BE DONE AS RAPIDLY AS COMPLETION OF ANY SECTION OF WORK MAY PERMIT.
2 PROTECT ADJACENT FINISHED SURFACES, TOUCH-UP ALL SCRATCHES, NICKS ETC. AS A RESULT OF THE CARPET INSTALLATION.
3 PREPARE, FLASH AND PATCH FLOORS AS REQUIRED FOR A FIRST-CLASS FINISHED PRODUCT.

8 CERAMIC TILE FLOORING:
A DESCRIPTION OF WORK:
1 THIS SECTION SHALL INCLUDE THE FURNISHING OF ALL LABOR AND MATERIALS FOR THE INSTALLATION OF CERAMIC TILE AS INDICATED ON THE DRAWINGS.
B MATERIALS:
1 USE SELECTION BY OWNER. SEE INTERIOR DESIGN DRAWINGS. BY OWNER FROM SUB-CONTRACTOR SUPPLIED SAMPLES.
2 THIN SET ON CONCRETE SUBFLOOR. PROVIDE COLORED GROUT. ARCHITECT TO APPROVE COLOR. SEE INTERIOR DESIGN DRAWINGS.
3 ALL TOOLS AND MATERIALS AS REQUIRED TO PREP NEW AND EXISTING SUBSTRATES TO RECEIVE NEW TILE FLOOR.
C INSTALLATION:
1 PREP AREAS OF FLOOR WHERE EXISTING TILE FLOOR HAS BEEN REMOVED, AS WELL AS, NEW FLOOR AREAS, AS REQUIRED FOR PROPER INSTALLATION OF NEW FLOOR AND BASE.
2 ALL PREPARATION AND INSTALLATION TO BE PER MANUFACTURER'S INSTRUCTIONS AND THE TILE CONACIL OF AMERICA, INC. AND THE CERAMIC TILE INSTITUTE OF AMERICA.
2 ALL WORK SHALL BE EXECUTED BY SKILLED AND EXPERIENCED MECHANICS IN A FIRST CLASS WORKMANLIKE MANNER AND SHALL BE COMPLETED AS RAPIDLY AS COMPLETION OF ANY SECTION OF WORK MAY PERMIT.
3 LEAVE UNUSED PORTIONS OF OPENED BOXES OF TILE AT THE SITE. NO LESS THAN 10 PIECES OF EACH COLOR USED.

13 VINYL BASE:
A DESCRIPTION OF WORK:
1 TO PROVIDE MATERIAL AND LABOR FOR PROPER INSTALLATION OF VINYL COVE BASE.
B MATERIALS:
1 STANDARD VINYL WALL BASE SHALL BE COVED-TOE PROFILE BASE SHALL BE 4" HIGH, 1/8", COLOR AS SELECTED BY ARCHITECT.
2 JOHNSONITE BRAND OR APPROVED EQUAL COLOR TO BE SELECTED BY ARCHITECT.
C INSTALLATION:
1 ALL WORK SHALL BE EXECUTED BY SKILLED AND EXPERIENCED MECHANICS IN A FIRST CLASS WORKMANLIKE MANNER AND SHALL BE COMPLETED IN CONNECTION WITH FLOORING. PROVIDE SPECIAL ADHESIVE AT CORNERS FOR A TIGHT BOND.

15 ACOUSTICAL CEILINGS:
A DESCRIPTION OF WORK:
1 TO PROVIDE MATERIAL AND LABOR TO INSTALL ALL ACOUSTIC TILE CEILINGS AND MECHANICAL SUSPENSION SYSTEMS AS INDICATED ON THE DRAWINGS.
B MATERIALS:
1 FURNISH AND INSTALL CEILING TYPES AS SHOWN ON INTERIOR DESIGN DRAWINGS.
2 MECHANICAL SUSPENSION SYSTEM SHALL BE AN EXPOSED GRID TYPE WITH BAKED ON ENAMEL FINISH. SYSTEM SHALL BE BY 'USG'. HOLD DOWN CLIPS SHALL BE INSTALLED IN ROOMS WITH AN EXTERIOR DOOR(S).
C INSTALLATION:
1 ALL WORK SHALL BE EXECUTED BY SKILLED AND EXPERIENCED MECHANICS IN A FIRST CLASS WORKMANLIKE MANNER AND SHALL BE COORDINATED WITH ELECTRICAL CONTRACTOR AND MECHANICAL CONTRACTOR TO ENSURE PROPER INTEGRATION OF LIGHTING AND DIFFUSERS.
2 LEAVE UNUSED PORTIONS OF OPEN CARTONS OF TILE WITH OWNER, NO LESS THAN 5 PIECES OF EACH.
3 MAINTAIN CLEAN HANDS OR USE GLOVES DURING INSTALLATION TO PROTECT ALL FINISHED SURFACES.

DIVISION 9 FINISHES (CONT.)

16 PAINTING: (SEE ALSO INTERIOR DESIGN DRAWINGS)
A DESCRIPTION OF WORK:
1 THE WORK INCLUDED IN THIS SECTION OF SPECIFICATIONS SHALL CONSIST OF FURNISHING ALL MATERIALS, LABOR AND APPLIANCES NECESSARY TO PAINT THE EXPOSED STEEL STRUCTURE AND ALL WALLS, CEILINGS, TRIM AND DOORS, ETC. AS INDICATED. FURNISHING OF ALL SCAFFOLDING, LADDERS, PLANKS, DROP CLOTHS AND OTHER EQUIPMENT REQUIRED TO COMPLETE THE WORK IS INCLUDED AS A PART OF THIS SECTION.
2 PAINTING CONTRACTOR SHALL PROVIDE FOR REASONABLE TOUCH-UP AT THE COMPLETION OF THE PROJECT.
3 PAINTING OF MISCELLANEOUS EXTERIOR ITEMS SUCH AS; EXPOSED LINTELS, FOUNDATION BLOCK, GAS PIPING, BRACKETS, PIPE BOLLARDS, FYPON, ETC.
B MATERIALS:
1 DELIVER MATERIALS TO THE JOB IN ORIGINAL CONTAINERS WITH SEALS UNBROKEN AND LABELS INTACT. ALL MATERIALS WILL BE BEST OF THEIR RESPECTIVE KIND. NO MATERIAL SHALL BE SUBSTITUTED OR DILUTED WITHOUT THE CONSENT OF THE GENERAL CONTRACTOR. ALL PAINT SHALL BE READY MIXED EXCEPT THAT TINTING AND THINNING MAY BE DONE AT JOB SITE.
2 MANUFACTURER TO BE DURON, ICI, OR APPROVED EQUAL.
3 LEAVE OPENED, UNUSED PAINT AT SITE WITH OWNER, PROPERLY LABEL EACH COLOR WITH COLOR # AND/OR COLOR FORMULA AS NECESSARY.
4 COLORS SHALL BE SELECTED BY ARCHITECT.
5 SUBMIT TO ARCHITECT FOR APPROVAL 5"x7" DRAW DOWNS OF ACTUAL PAINT, COLOR(S) AND SHEEN(S) AS SPECIFIED PRIOR TO APPLICATION.
C INSTALLATION:
1 ALL WORK SHALL BE EXECUTED BY SKILLED AND EXPERIENCED MECHANICS IN A FIRST CLASS WORKMANLIKE MANNER AND SHALL BE DONE AS RAPIDLY AS COMPLETION OF ANY SECTION OF WORK MAY PERMIT.
2 PAINTING ANY SURFACE IS CONSIDERED AS ACCEPTABLE TO THE PAINTER AS A FINISHED PRODUCT.
3 NO EXTERIOR PAINTING SHALL BE DONE IN RAINY, DAMP, OR FREEZING WEATHER, OR UNTIL SURFACE IS THOROUGHLY DRY. DO NOT PAINT ANY SURFACES THAT ARE NOT COMPLETE AND READY FOR PAINTING. MINIMUM SURFACE TEMPERATURE 50°F FOR LATEX AND 45°F FOR ALKYD. FOLLOW MANUFACTURES WRITTEN INSTRUCTIONS FOR PROPER DRY TIME BETWEEN COATS OF PAINT.

6 ALL PAINTED G.W.B.: (SEE ALSO INTERIOR DESIGN DRAWINGS)
PRIMER-1 COAT: 'SHERWIN WILLIAMS' INTERIOR DRYWALL VINYL PRIMER SEALER
INTERMEDIATE COAT-1 COAT: 'SHERWIN WILLIAMS' LATEX EGGSHELL INTERIOR ENAMEL.
FINISH COAT-1 COAT: 'SHERWIN WILLIAMS' LATEX EGGSHELL INTERIOR ENAMEL

9 ALL PAINTED EXTERIOR STEEL:
PRIMER: 1 COAT: ICI DEVGUARD 4100 OR 4120.
INTERMEDIATE 1 COAT: ICI DEVGUARD 4308 ALKYD INDUSTRIAL GLOSS ENAMEL.
FINISH 1 COAT: ICI DEVGUARD 4308 ALKYD INDUSTRIAL GLOSS ENAMEL.
10 ALL PAINTED WOOD TRIM AND OR WOOD DOORS:
PRIMER: 'SHERWIN WILLIAMS' WALL KOTE INTERIOR ALKYD ENAMEL UNDERCOATER, 04-024
(OIL) INTERMEDIATE COAT: 'SHERWIN WILLIAMS' WALL KOTE INTERIOR ALKYD SEMI-GLOSS ENAMEL, 48-SERIES OR ICI ULTRA HIDE ALKYD SEMI-GLOSS INTERIOR ENAMEL #1516
(OIL) FINISH COAT: 'SHERWIN WILLIAMS' WALL KOTE INTERIOR ALKYD SEMI-GLOSS ENAMEL, 48-SERIES OR ICI ULTRA HIDE ALKYD SEMI-GLOSS INTERIOR ENAMEL #1516
OR (OPTIONAL): 'SHERWIN WILLIAMS' WALL KOTE ALKYD EGGSHELL ENAMEL, 45-SERIES OR ICI ULTRA HIDE ALKYD EGGSHELL INTERIOR ENAMEL #1512
(LATEX) INTERMEDIATE COAT: 'SHERWIN WILLIAMS' ULTRA DELUXE INTERIOR ACRYLIC LATEX SEMI-GLOSS ENAMEL, 35-SERIES OR ICI ULTRA HIDE LATEX SEMI-GLOSS INTERIOR ENAMEL #1416
(LATEX) FINISH COAT: DURON ULTRA DELUXE INTERIOR ACRYLIC LATEX. SEMI-GLOSS ENAMEL, 35-SERIES OR ICI ULTRA LATEX SEMI-GLOSS INTERIOR ENAMEL #1416
OR (OPTIONAL): 'SHERWIN WILLIAMS' PLASTIC KOTE INTERIOR ACRYLIC EGGSHELL ENAMEL 20-SERIES OR ICI ULTRA EGGSHELL INTERIOR ACRYLIC ENAMEL #1403
11 ALL INTERIOR METAL TRIM & DOORS-FACTORY PRIMED & MISCELLANEOUS (BARE STEEL UNPRIMED) TO RECEIVE 1 FULL COAT OF PRIMER LISTED:
TOUCH UP: 'SHERWIN WILLIAMS' WHITE METAL PRIMER, 33-015 OR ICI DEVGUARD #4120 ALL PURPOSE METAL & GALVANIZED PRIMER #4120-1000 OR DURON CLAD DAMP PROOF RED OXIDE METAL PRIMER, 33-015 OR ICI DEVGUARD 4100 ALL PURPOSE METAL AND GALVANIZED PRIMER #4100-7100
1st COAT OVER PRIMED SURFACE:
1 COAT: 'SHERWIN WILLIAMS' WALL KOTE INTERIOR ALKYD SEMI-GLOSS ENAMEL, 48-SERIES OR ICI ULTRA HIDE ALKYD SEMI-GLOSS INTERIOR ENAMEL #1516
FINISH COAT-1 COAT: 'SHERWIN WILLIAMS' WALL KOTE INTERIOR ALKYD SEMI-GLOSS ENAMEL, 48-SERIES OR ICI ULTRA HIDE ALKYD SEMI-GLOSS INTERIOR ENAMEL #1516
12 ALL STAINED WOOD:
SATIN COAT: 'SHERWIN WILLIAMS' INTERIOR PENETRATING OIL WOOD STAIN, 28-100 OR ICI WOODPRIDE INTERIOR OIL WOOD FINISHING STAIN #1700 (MATCH EXISTING)
SEAL COAT-1 COAT: 'SHERWIN WILLIAMS' INTERIOR SANDING WOOD SEALER/ SEMI-GLOSS FINISH, 15-014 OR ICI WOODPRIDE INTERIOR POLY SATIN VARNISH-THINNED 10% #1902
FINISH COAT-1 COAT: 'SHERWIN WILLIAMS' INTERIOR SANDING WOOD SEALER/SEMI-GLOSS FINISH, 15-014 OR ICI WOODPRIDE INTERIOR POLY SATIN VARNISH-THINNED 10% #1902

14 EXPOSED FOUNDATION BLOCK:
1 COAT "THORO-COAT" (CEMENTITIOUS PAINT) OR ICI ULTRA HIDE BLOCKAID FILLER #3110-1200

16 GYPSUM BOARD CEILING:
SPRAYED ON POPCORN CEILING. FINISH: FINE.
LEAVE UNUSED PORTIONS OF A QUART OR GREATER IN MARKED & LABELED CANS W/ THE COLOR AND ROOM, FOR OWNER TOUCH-UP.
CLEAN-UP:
REMOVE ALL EMPTY CONTAINERS FROM THE PROJECT. DO NOT SPILL ANY UNUSED PAINT, PAINT THINNERS OR SOLVENTS ON THE PREMISES. REMOVE ALL USED SOLVENTS, CLEANERS, ETC. AND PROPERLY DISPOSE OF OFF SITE. PROTECT ALL ADJACENT SURFACES. CLEAN OR REPAINT ANY OVER SPRAY OR EXCESS PAINT.
17 COMMERCIAL VINYL WALL COVERING:
A DESCRIPTION OF WORK:
1 TO PROVIDE MATERIAL AND LABOR TO INSTALL ALL COMMERCIAL VINYL WALL FABRIC AS INDICATED ON THE DRAWINGS.
B MATERIALS:
1 SHALL BE IN ACCORDANCE WITH THE INTERIOR DESIGN DRAWINGS, 54" WIDE, CLASS A FLAME RATED IN ACCORDANCE WITH ASTM-E84 TUNNEL TEST AND SHALL MEET OR EXCEED ALL REQUIREMENTS OF FEDERAL SPECIFICATION CCC-W-408D FOR TYPE II WALL COVERINGS AS TESTED BY THE UNITED STATES TESTING COMPANY.
C INSTALLATION:
1 ALL WALLS TO BE PAPERED SHALL BE SIZED WITH A GLUTINOUS SIZING AS RECOMMENDED BY PAPER MANUFACTURER.
2 ALL WORK SHALL BE EXECUTED BY SKILLED AND EXPERIENCED MECHANICS IN A FIRST CLASS WORKMANLIKE MANNER.
3 MAINTAIN CLEAN HANDS OR USE GLOVES DURING INSTALLATION TO PROTECT ALL FINISHED SURFACES
4 LEAVE UNUSED USEABLE PORTIONS OF WALL FABRIC ON SITE.

DIVISION 10 SPECIALTIES

1 FIRE EXTINGUISHERS:
A DESCRIPTION OF WORK:
1 THIS SECTION SHALL INCLUDE THE FURNISHING AND INSTALLATION OF ALL FIRE EXTINGUISHERS AS SHOWN ON THE DRAWINGS, HEREIN SPECIFIED AND REQUIRED FOR A COMPLETED PROJECT IN STRICT ACCORDANCE WITH ALL APPLICABLE CONTRACT DOCUMENTS. FIRE EXTINGUISHERS WILL COMPLY WITH PENNSYLVANIA DEPARTMENT OF LABOR AND INDUSTRY REQUIREMENTS.
B MATERIALS:
1 MULTI-PURPOSE, DRY CHEMICAL, CONFORMING TO NFPA 10 REQUIREMENTS, WALL MOUNTED.
2 QUANTITY: SEE ARCHITECTURAL FLOOR PLAN.
3 MANUFACTURER TO BE LARSENS OR APPROVED EQUAL, MP SERIES MULTI-PURPOSE FIRE EXTINGUISHER (TAGGED AND DATED AS REQUIRED)
4 QUANTITY: SEE ARCHITECTURAL FLOOR PLAN
5 KITCHEN: WET CHEMICAL "KITCHEN USE" STORED PRESSURE FIRE EXTINGUISHER MODEL NO. 262 BY AMEREX (U/L RATING 2A:1B:C:K)
2 FIRE EXTINGUISHERS AND CABINETS:
A DESCRIPTION OF WORK:
1 THIS SECTION SHALL INCLUDE THE FURNISHING AND INSTALLATION OF ALL FIRE EXTINGUISHER CABINETS AND EXTINGUISHERS AS SHOWN ON THE DRAWINGS AND HEREIN SPECIFIED AND REQUIRED FOR A COMPLETED PROJECT IN STRICT ACCORDANCE WITH ALL APPLICABLE CONTRACT DOCUMENTS. FIRE EXTINGUISHERS AND CABINETS SHALL COMPLY WITH PENNSYLVANIA DEPARTMENT OF LABOR AND INDUSTRY REQUIREMENTS.
B MATERIALS:
1 MULTI-PURPOSE, DRY CHEMICAL, 10 LB, ABC, DRY CHEMICAL EXTINGUISHERS EQUAL TO BY J.L. INDUSTRIES; COSMIC. AT ALL LOCATIONS INDICATED, EXCEPT KITCHEN AREAS TO BE 10 LB., TYPE B EXTINGUISHERS EQUAL TO J.L. INDUSTRIES; GALAXY.
2 SEMI-RECESSED CABINETS BY J.L. INDUSTRIES EQUAL TO MODEL NUMBER 1525, WITH FULL ACRYLIC DOOR, WITH CLEAR BUBBLE AND ALUMINUM TRIM.
3 QUANTITY: SEE ARCHITECTURAL FLOOR PLAN
3 TOILET ROOM PARTITIONS AND ACCESSORIES:
A DESCRIPTION OF WORK:
1 TOILET ROOM PARTITIONS TO BE PROVIDED AT ALL RESTROOMS AS SHOWN ON THE DRAWINGS.
2 TOILET ROOM ACCESSORIES TO INCLUDE: HANDICAPPED GRAB BARS AT HANDICAPPED STALLS, TOILET PAPER DISPENSERS, MIRRORS, SOAP DISPENSERS. BIBLE SHELVES, ETC. AS SCHEDULED ON THE DRAWINGS.
B MATERIALS:
4 ACCESSORIES TO BE BY AMERICAN SPECIALTIES INC. OR APPROVED EQUAL. (SEE INTERIOR DESIGN DEAWINGS)
C INSTALLATION:
1 ALL TOILET ROOM ACCESSORIES TO BE MOUNTED AT REQUIRED HANDICAPPED HEIGHTS. VERIFY MOUNTING HEIGHTS SCHEDULED WITH DRAWINGS AND LOCAL AND STATE CODES BEFORE MOUNTING.

10 SIGNAGE:
A DESCRIPTION:
1 PROVIDE AND COORDINATE ALL REQUIRED CORPARTE SIGNAGE.

B INSTALLATION:
1 INSTALLATION WILL BE PERFORMED IN STRICT ACCORDANCE WITH MANUFACTURER'S WRITTEN INSTRUCTIONS BY WORKMAN EXPERIENCE IN THIS TRADE AND PERFORMED IN A WORKMANLIKE MANNER.

14 HEAVY-DUTY WIRE SHELVING:
A DESCRIPTION:
1 5 SHELF HEAVY DUTY WIRE SHELVING AS SHOWN ON PLANS.
B MATERIALS:
1 SHALL BE SUPER ERECTA SHELVING BY METRO, AS IN THE GRAINGER CATALOG OR EQUAL. SIZES AS SHOWN ON PLANS.
C INSTALLATION:
1 INSTALLATION WILL BE PERFORMED IN STRICT ACCORDANCE WITH MANUFACTURER'S WRITTEN INSTRUCTIONS IN A WORKMANLIKE MANNER.

HEX 9 ARCHITECTS — ARCHITECTURE PLANNING
An LLC Company
5427 Woodside Drive
Gap, PA 17527
(717) 442-9034
(717) 283-0097 fx
JOSEPH TURNOWCHYK, AIA, NCARB

STATE OF NEW YORK REGISTRATION # 036357-1

ALL CONTRACTORS ARE TO VERIFY ALL DIMENSIONS, FIELD CONDITIONS AND THE WORK OF OTHER TRADES BEFORE PROCEEDING WITH THEIR WORK.

This drawing is the exclusive property of HEX 9 ARCHITECTS and may not be reproduced in any form without written authorization from HEX 9 ARCHITECTS. Unauthorized reproduction or use of any or all parts of this drawing will constitute a violation of U.S. copyright laws.
COPYRIGHT © 2018 HEX 9 ARCHITECTS ALL RIGHTS RESERVED

REVISIONS

NUMBER	DATE	REVISED BY

DATE	FEBRUARY 6, 2018
DRAWN BY	CMT
PROJECT NUMBER	16114

NEW FACILITY FOR:
SLEEP INN & SUITES
CHOICE PROPERTY I.D. # NY701
635 ELMIRA ROAD
ITHACA, NEW YORK 14850

ARCHITECTURAL SPECIFICATIONS

A702
DRAWING NUMBER

FINAL DRAWINGS

I:\2016\16114 SLEEP INN - ITHACA, NY\PRODUCTION\A701-A702 ARCH SPECS.DWG 05-31-18 9:37 AM PRINTED BY: USER06