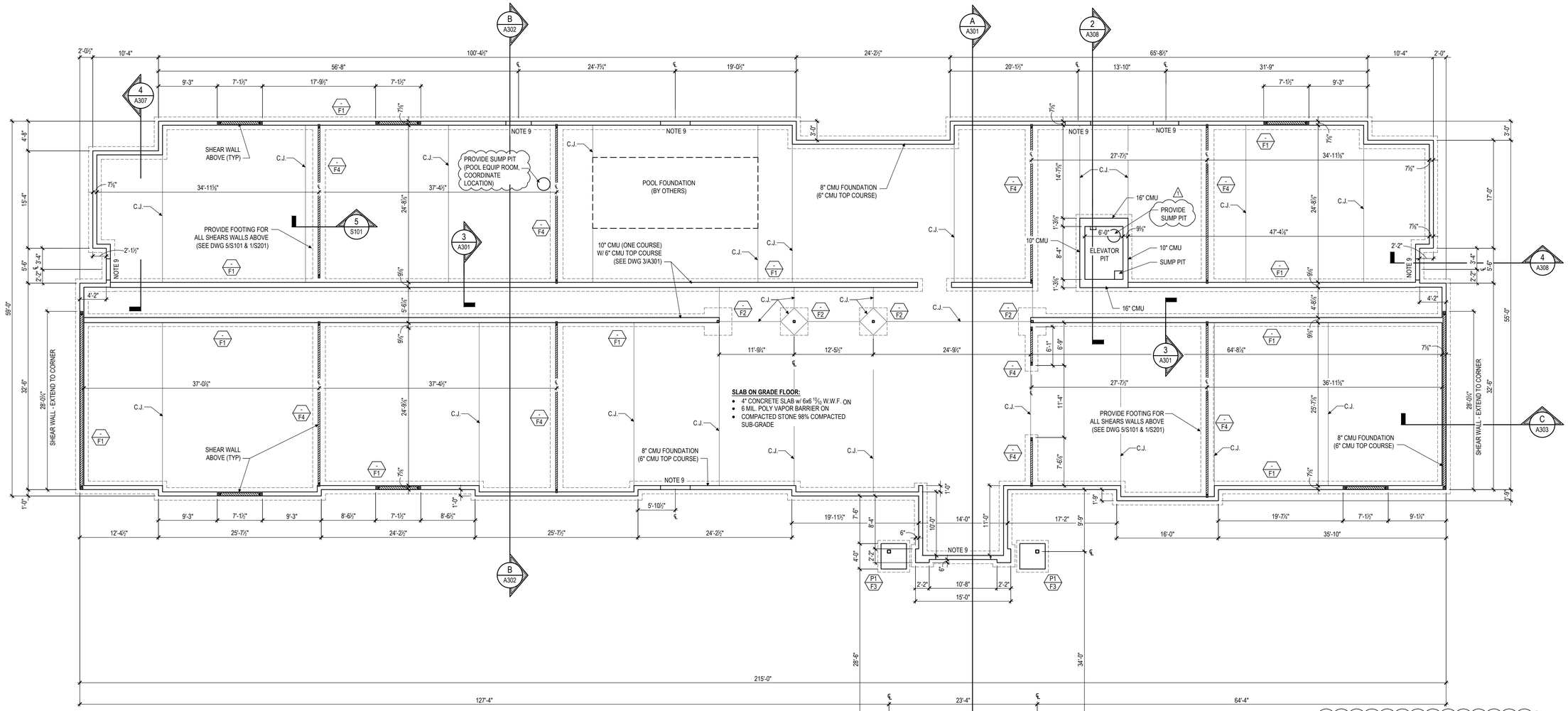

1 S101 FOUNDATION PLAN

SCALE: 1/8"=1'-0"

DENOTES SHEAR WALL PANELS W/ (3) 2x BUNDLED STUDS (S.Y.P.) EACH END W/ HD9B HOLDOWN ANCHORS, 7/8" BOLT W/ 6" MIN. EMBEDMENT INTO CONCRETE FOUNDATION (SEE DETAILS & SCHEDULES SHEET S402)

2 C.J. - DENOTES CONTROL JOINT

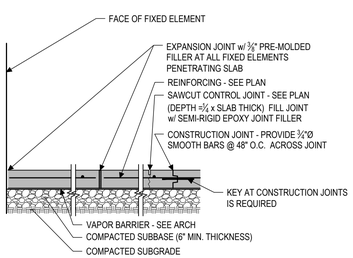

6 S101 TYPICAL SLAB ON GRADE DETAIL

SCALE: N.T.S.

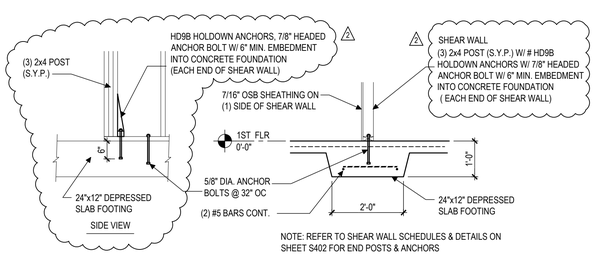

5 S101 SHEAR WALL FOOTING DETAIL

SCALE: 1/2"=1'-0"

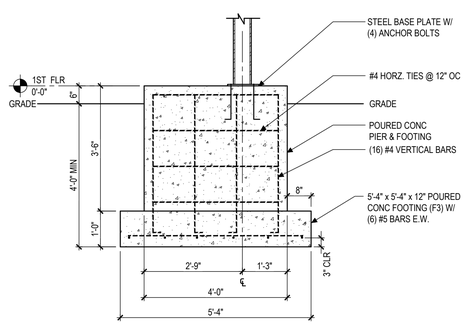

4 S101 CANOPY PIER / FOOTING DETAIL

SCALE: 1/2"=1'-0"

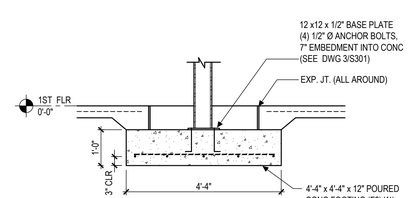

3 S101 COLUMN FOOTING

SCALE: 1/2"=1'-0"

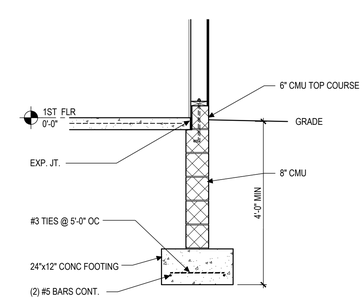

2 S101 TYP. CONT. FOOTING DETAIL

SCALE: 1/2"=1'-0"

ELEVATOR PIT NOTES

PROVIDE WATER PROOFING SYSTEM OVER ELEVATOR PIT WALLS (TREMCO WATCHDOG H3 OR EQUAL)

COORDINATE ELEVATOR PIT DEPTH WITH MANUF'S SPECIFICATIONS

FOOTING SCHEDULE

MARK	SIZE	THICKNESS	STEEL	DETAIL
F1	24"x CONTINUOUS	12"	(2) #5 BARS CONT. w/ #3 TIES AT 5'-0" O.C.	2/S101
F2	4'-4" x 4'-4"	12"	(5) #5 BARS EACH WAY	3/S101
F3	5'-4" x 5'-4"	12"	(6) #5 BARS EACH WAY	4/S101
F4	24"x CONTINUOUS	12"	(2) #5 BARS CONT. w/ #3 TIES AT 5'-0" O.C.	5/S101

PIER SCHEDULE

MARK	WIDTH	DEPTH	REINFORCEMENT	DETAIL
P1	4'-0" x 4'-0"	± 3'-6"	(16) #4 VERT. BARS w/ #4 TIES @ 12" OC	4/S101

GENERAL FOUNDATION NOTES

1. TOP OF FLOOR SLAB/ REFERENCE ELEVATION = 0'-0".
2. TOP OF FOOTING ELEVATION TO BE -2'-8" BELOW TOP OF SLAB UNLESS NOTED OTHERWISE.
3. F_ DENOTES FOOTING MARK, REFER TO FOOTING SCHEDULE.
4. P_ DENOTES PIER MARK, REFER TO PIER SCHEDULE.
5. TOP OF PIERS TO BE FLUSH WITH FINISHED SLAB UNLESS NOTED OTHERWISE.
6. ¾" ANCHOR BOLTS NEED 12" EMBEDMENT. 1" ANCHOR BOLTS NEED 16" EMBEDMENT. 1½" ANCHOR BOLTS NEED 18" EMBEDMENT. ALL ANCHOR BOLTS WILL BE A36 THREADED ROD WITH NUT AND WASHER AT BASE PLATE, AND NUT ONLY AT END EMBEDDED IN CONCRETE PIER.
7. PIER / FOOTING DESIGN SHOWN FOR DIAGRAMMATIC PURPOSES ONLY.
8. DO NOT ADD WATER TO CONCRETE. USE CONCRETE AS MIXED AT PLANT.
9. CONTINUE CONCRETE SLAB OVER DOOR OPENINGS (NO 6" CMU TOP COURSE)

FINAL DRAWINGS

HEX 9 ARCHITECTS
5427 Woodside Drive
Gap, PA 17527
(717) 442-9034
(717) 283-0097 fx
An LLC Company
JOSEPH TURNOWCHYK, AIA, NCARB

STATE OF NEW YORK REGISTRATION # 036357-1

ALL CONTRACTORS ARE TO VERIFY ALL DIMENSIONS, FIELD CONDITIONS AND THE WORK OF OTHER TRADES BEFORE PROCEEDING WITH THEIR WORK.

This drawing is the exclusive property of HEX 9 ARCHITECTS and may not be reproduced in any form without written authorization from HEX 9 ARCHITECTS. Unauthorized reproduction or use of any or all parts of this drawing will constitute a violation of U.S. copyright laws.
COPYRIGHT © 2018 HEX 9 ARCHITECTS ALL RIGHTS RESERVED

REVISIONS

NUMBER	DATE	REVISED BY
1	6-01-2018	RN
2	7-10-2018	RN

DATE	FEBRUARY 6, 2018
DRAWN BY	CMT
PROJECT NUMBER	16114

NEW FACILITY FOR:
SLEEP INN & SUITES
635 ELMIRA ROAD
ITHACA, NEW YORK 14850

CHOICE PROPERTY I.D. # NY701

STRUCTURAL FOUNDATION PLAN

S101
DRAWING NUMBER

12/06/2018 SLEEP INN - ITHACA, NY\PRODUCTION\S101 FOUNDATION.DWG\07-12-18 8:49 AM\PRINTED BY: JGORON

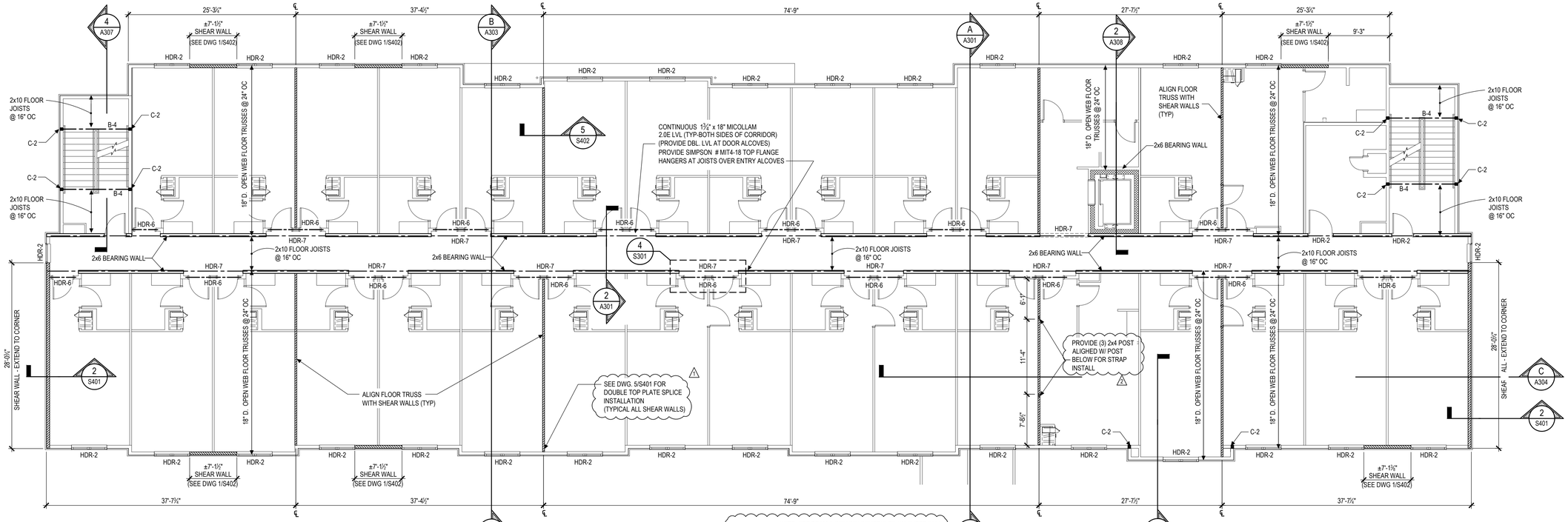

THIRD FLOOR FRAMING PLAN

2 S201 — SCALE: 1/8"=1'-0"

NOTE: SEE BEAM & COLUMN SCHEDULES ON SHEET S301
DENOTES SHEAR WALL PANELS w/ (3) BUNDLED STUD POST EACH END. STRAP TO POST BELOW W/ #MST60 (SEE DETAILS & SCHEDULES SHEET S402)

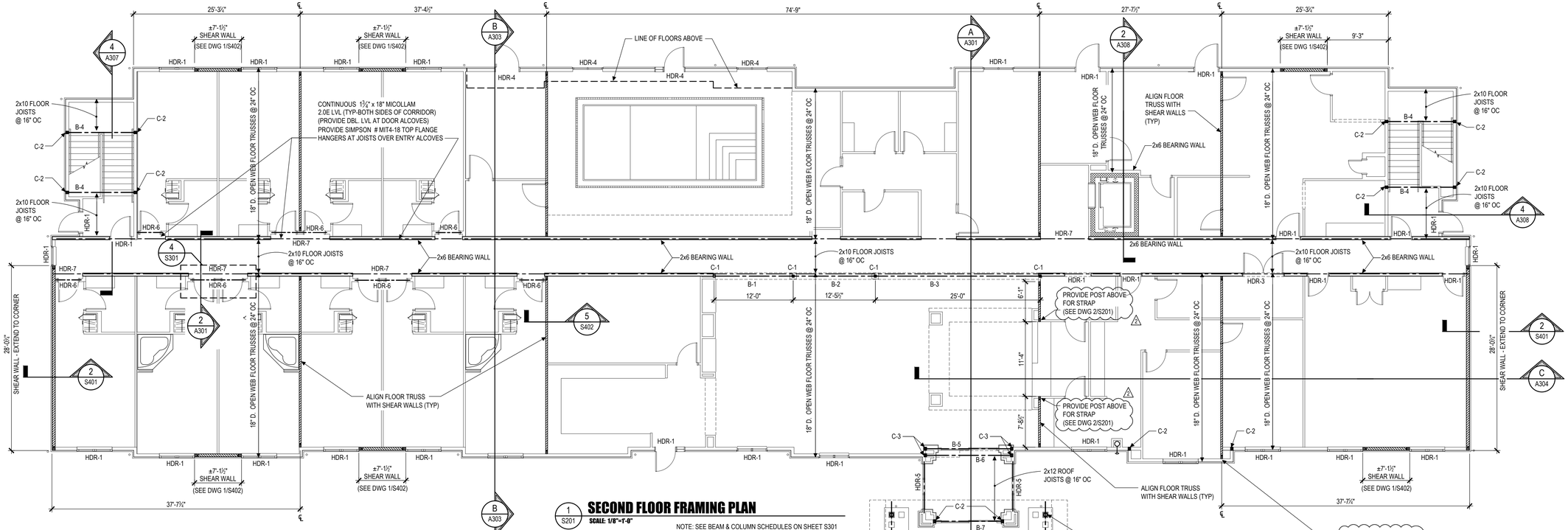

SECOND FLOOR FRAMING PLAN

1 S201 — SCALE: 1/8"=1'-0"

NOTE: SEE BEAM & COLUMN SCHEDULES ON SHEET S301
DENOTES SHEAR WALL PANELS W/ (3) 2x BUNDLED STUD (S.Y.P.) EACH END W/ HD9B HOLDOWN ANCHORS, 7/8" BOLT W/ 6" MIN. EMBEDMENT INTO CONCRETE FOUNDATION (SEE DETAILS & SCHEDULES SHEET S402)
NOTE: SHEAR WALLS ALSO SHOWN ON FOUNDATION PLAN FOR CLARITY

FINAL DRAWINGS

HEX 9 ARCHITECTS
5407 Woodside Drive
Gap, PA 17527
(717) 442-9034
(717) 283-0097 fx
An LLC Company
JOSEPH TURNOWCHYK, AIA, NCARB

STATE OF NEW YORK REGISTRATION # 036357-1

ALL CONTRACTORS ARE TO VERIFY ALL DIMENSIONS, FIELD CONDITIONS AND THE WORK OF OTHER TRADES BEFORE PROCEEDING WITH THEIR WORK.

This drawing is the exclusive property of HEX 9 ARCHITECTS and may not be reproduced in any form without written authorization from HEX 9 ARCHITECTS. Unauthorized reproduction or use of any or all parts of this drawing will constitute a violation of U.S. copyright laws.
COPYRIGHT © 2018 HEX 9 ARCHITECTS ALL RIGHTS RESERVED

REVISIONS

NUMBER	DATE	REVISED BY
1	6-01-2018	RN
2	7-10-2018	RN

DATE	FEBRUARY 6, 2018
DRAWN BY	CMT
PROJECT NUMBER	16114

NEW FACILITY FOR:
SLEEP INN & SUITES CHOICE PROPERTY I.D. # NY701
635 ELMIRA ROAD
ITHACA, NEW YORK 14850

STRUCTURAL FLOOR FRAMING PLANS

S201
DRAWING NUMBER

2018/6/14 6:18P RN - ITHACA, NY/PRODUCTION/S201 FLOOR FRAMING.DWG (F:\2-16 9 AM PRINTED BY: USER8)

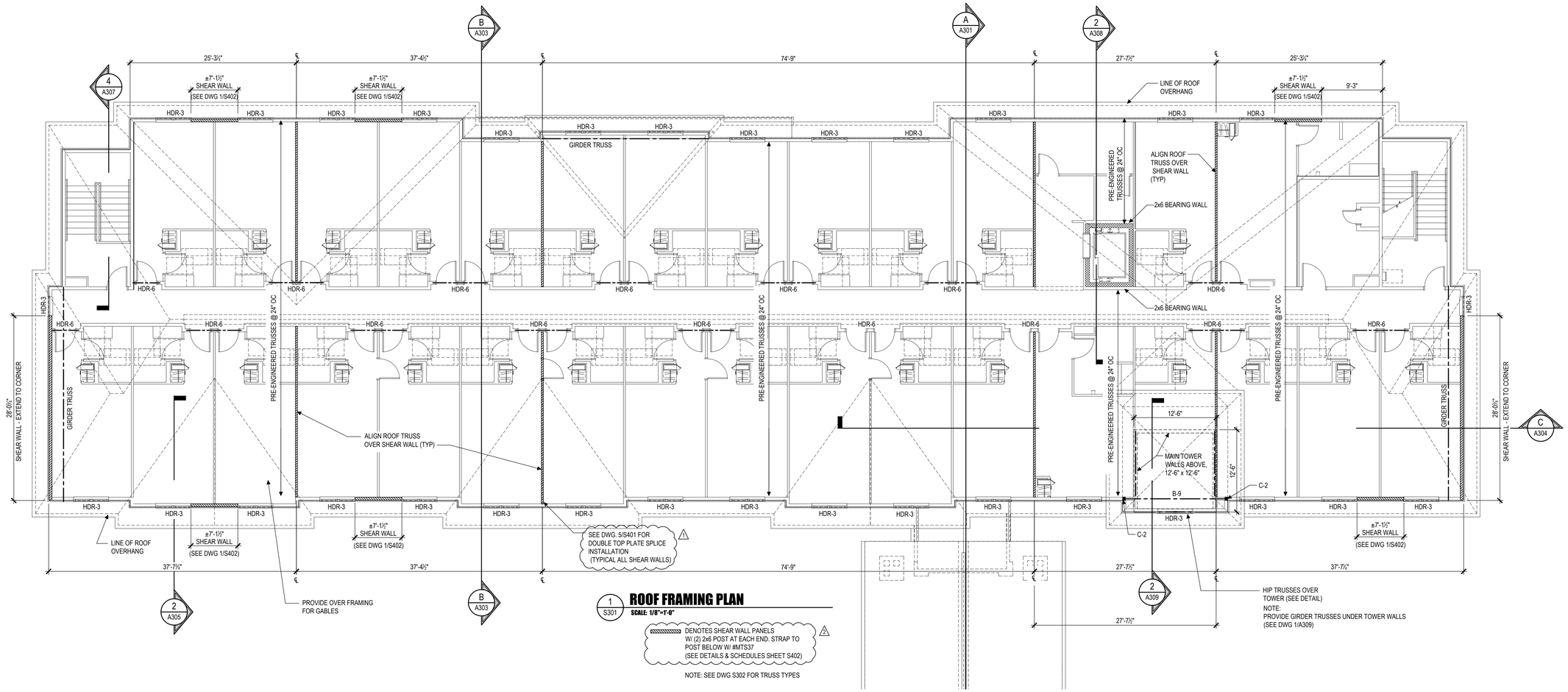

1 S301 ROOF FRAMING PLAN

SCALE: 1/8"=1'-0"

DENOTES SHEAR WALL PANELS W/ (2) 2x6 POST AT EACH END. STRAP TO POST BELOW W/ #MTS37 (SEE DETAILS & SCHEDULES SHEET S402) △2

NOTE: SEE DWG S302 FOR TRUSS TYPES

COLUMN SCHEDULE

MARK	DESCRIPTION	DETAIL
C-1	HSS 4 x 4 x 1/4" STEEL COLUMN	3/S401
C-2	(3) 2x6 JACKS & (2) 2x6 KINGS △2	4/S401
C-3	(3) 2x6 JACKS & (2) 2x6 KINGS	4/S401
C-4	HSS 6 x 6 x 1/4" STEEL COLUMN w/ 12x12x1/2" BASE PLATE	3/S401 3/S301

BEAM & HEADER SCHEDULE

MARK	DESCRIPTION	BEARING	DETAIL	NOTES
B-1	W8x21 STEEL BEAM	COLUMN C-1	1/S401	
B-2	W8x21 STEEL BEAM	COLUMN C-1	1/S401	
B-3	W16 x 45 STEEL BEAM	COLUMN C-1	1/S401	
B-4	(2) PLY 1 3/4 x 9 1/4 LVL MICROLLAM	COLUMN C-2	4/A307	TYPICAL FOR STAIR LANDINGS
B-5	(3) PLY 1 3/4 x 14 LVL MICROLLAM	COLUMN C-3	1/A306	
B-6	(3) PLY 1 3/4 x 11 7/8 LVL MICROLLAM	COLUMN C-3	1/A306	
B-7	(2) PLY 1 3/4 x 11 7/8 LVL MICROLLAM	COLUMN C-2	1/A306	
B-8	W16 x 31 STEEL BEAM	COLUMN C-4	1/S401	
B-9	(3) PLY 1 3/4 x 14 LVL MICROLLAM	COLUMN C-2	1/A302	
HDR-1	(2) PLY 2x10 HEADER	(2) 2x6 JACKS & (2) 2x6 KINGS	4/S401	
HDR-2	(2) PLY 2x10 HEADER	(2) 2x6 JACKS & (2) 2x6 KINGS	4/S401	
HDR-3	(3) PLY 2x10 HEADER	(2) 2x6 JACKS & (2) 2x6 KINGS	4/S401	
HDR-4	(3) PLY 2x10 HEADER	(2) 2x6 JACKS & (2) 2x6 KINGS	4/S401	
HDR-5	(3) PLY 2x8 HEADER	(3) 2x6 JACKS & (2) 2x6 KINGS	2/A306	
HDR-6	(3) PLY 2x6 HEADER	(2) 2x6 JACKS & (2) 2x6 KINGS	2/A301	TYPICAL FOR GUEST ROOM ENTRY DOORS
HDR-7	PROVIDE 2ND 18" LVL AGAINST CONT. 18" LVL RIM BOARD	(3) 2x6 JACKS & (2) 2x6 KINGS	2/A301 4/S301	TYPICAL FOR GUEST ROOM ENTRY ALCOVES

△2

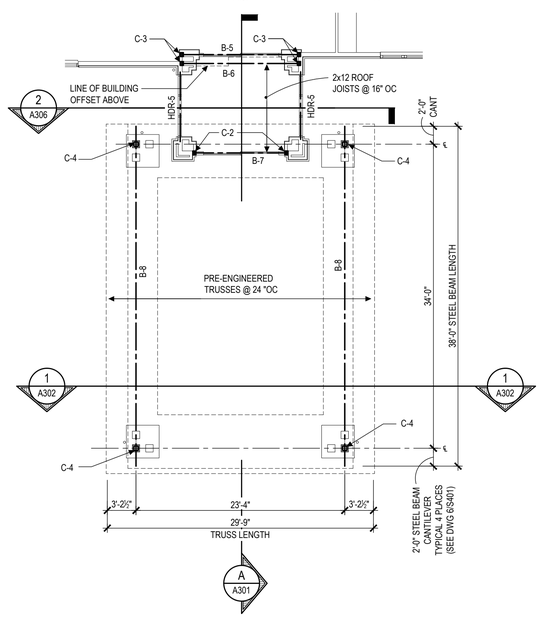

2 S301 PORTE COCHERE STRUCTURAL ROOF FRAMING PLAN

SCALE: 1/8"=1'-0"

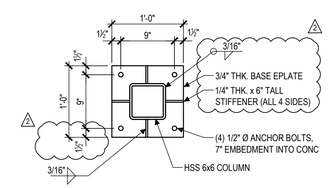

3 S301 BASE PLATE DETAIL

SCALE: 1"=1'-0"

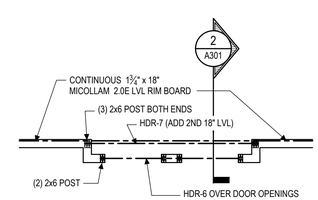

4 S301 TYPICAL GUEST ROOM ALCOVE

SCALE: 1/4"=1'-0"

△2

FINAL DRAWINGS

HEX 9 ARCHITECTS
5427 Woodside Drive
Gap, PA 17527
(717) 442-9034
(717) 283-0097 fx
An LLC Company
JOSEPH TURNOWCHYK, AIA, NCARB

STATE OF NEW YORK REGISTRATION # 036357-1

ALL CONTRACTORS ARE TO VERIFY ALL DIMENSIONS, FIELD CONDITIONS AND THE WORK OF OTHER TRADES BEFORE PROCEEDING WITH THEIR WORK.

This drawing is the exclusive property of HEX 9 ARCHITECTS and may not be reproduced in any form without written authorization from HEX 9 ARCHITECTS. Unauthorized reproduction or use of any or all parts of this drawing will constitute a violation of U.S. copyright laws.

COPYRIGHT © 2018 HEX 9 ARCHITECTS ALL RIGHTS RESERVED

REVISIONS

NUMBER	DATE	REVISED BY
△1	6-01-2018	RN
△2	7-10-2018	RN

DATE	FEBRUARY 6, 2018
DRAWN BY	CMT
PROJECT NUMBER	16114

NEW FACILITY FOR:
SLEEP INN & SUITES
635 ELMIRA ROAD
ITHACA, NEW YORK 14850

CHOICE PROPERTY I.D. # NY701

ROOF FRAMING PLAN

S301

DRAWING NUMBER

12/06/18 14:15 SLEEP INN - ITHACA, NY\PROJECT\16114\S301 ROOF FRAMING.DWG,10-12-18 5:17 AM,PRINTED BY: USER06

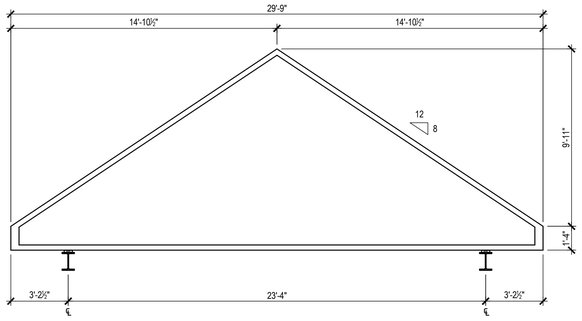

A S302 **TRUSS TYPE 'A'**
SCALE: 1/4"=1'-0" PORTE COCHERE

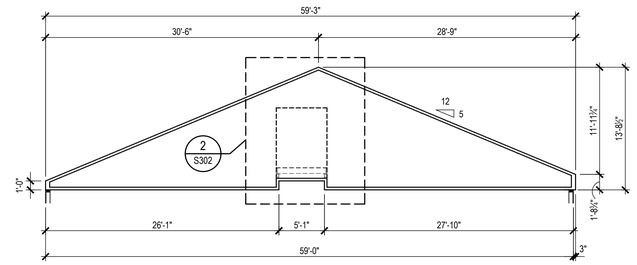

B S302 **TRUSS TYPE 'B'**
SCALE: 1/8"=1'-0"

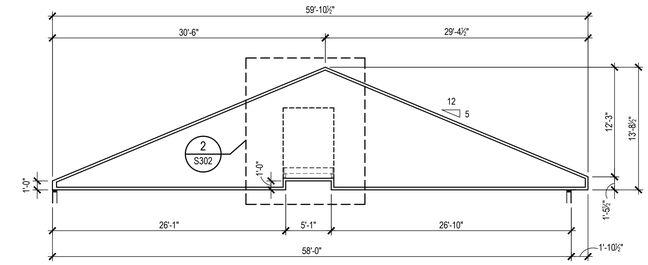

C1 S302 **TRUSS TYPE 'C1'**
SCALE: 1/8"=1'-0"

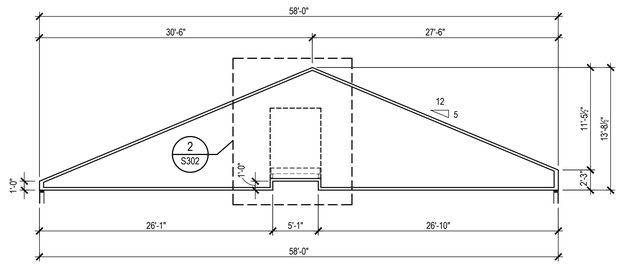

C2 S302 **TRUSS TYPE 'C2'**
SCALE: 1/8"=1'-0"

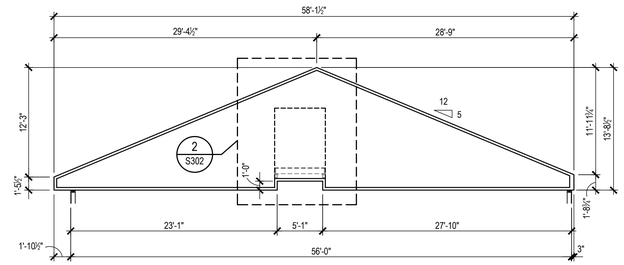

D S302 **TRUSS TYPE 'D'**
SCALE: 1/8"=1'-0"

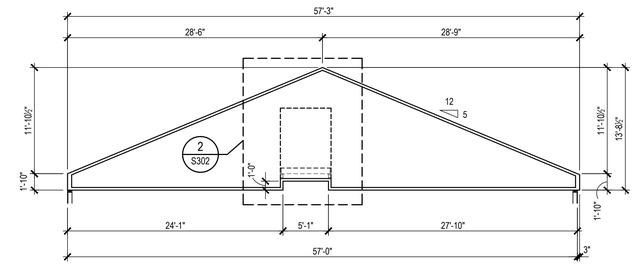

E S302 **TRUSS TYPE 'E'**
SCALE: 1/8"=1'-0"

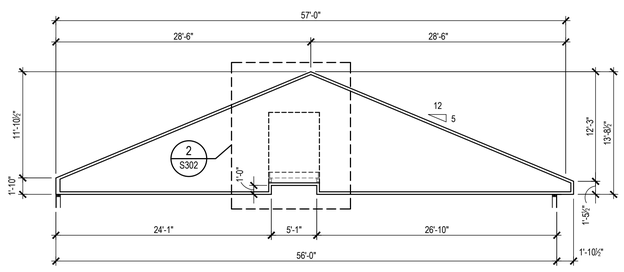

F S302 **TRUSS TYPE 'F'**
SCALE: 1/8"=1'-0"

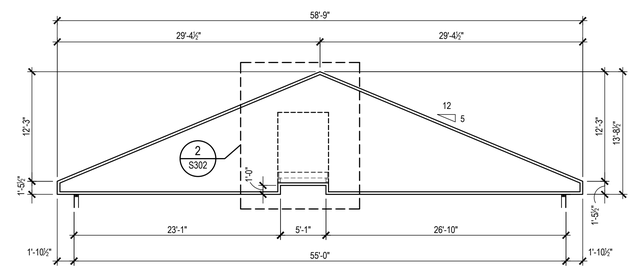

G S302 **TRUSS TYPE 'G'**
SCALE: 1/8"=1'-0"

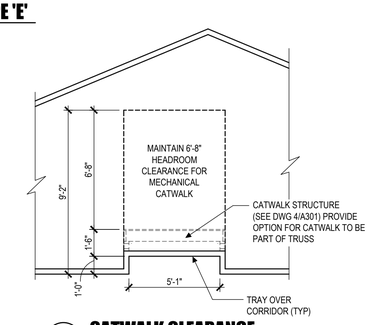

2 S302 **CATWALK CLEARANCE**
SCALE: 1/4"=1'-0"

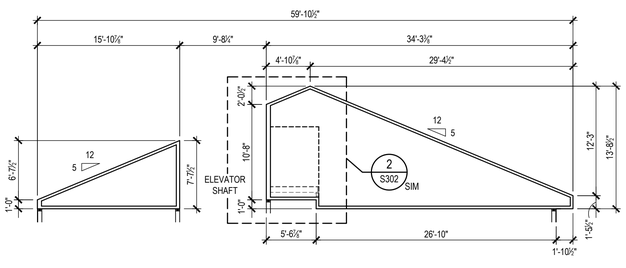

HA S302 **TRUSS TYPE 'HA'**
SCALE: 1/8"=1'-0"

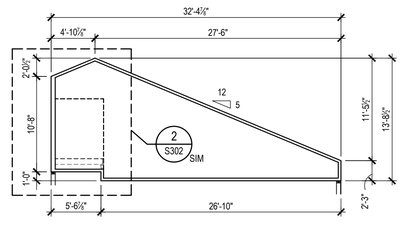

HB S302 **TRUSS TYPE 'HB'**
SCALE: 1/8"=1'-0"

HC S302 **TRUSS TYPE 'HC'**
SCALE: 1/8"=1'-0"

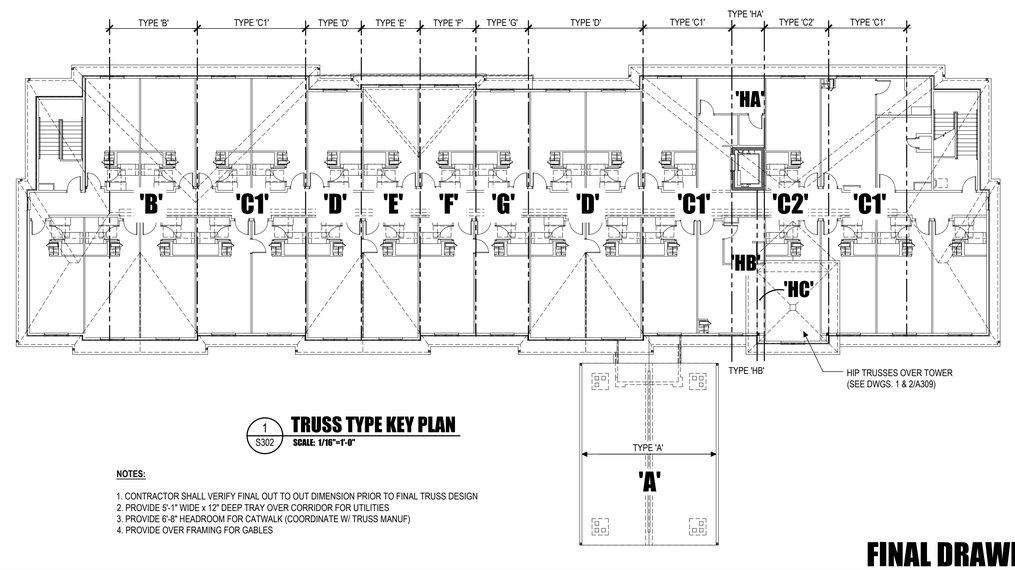

1 S302 **TRUSS TYPE KEY PLAN**
SCALE: 1/16"=1'-0"

NOTES:

1. CONTRACTOR SHALL VERIFY FINAL OUT TO OUT DIMENSION PRIOR TO FINAL TRUSS DESIGN
2. PROVIDE 5'-1" WIDE x 12" DEEP TRAY OVER CORRIDOR FOR UTILITIES
3. PROVIDE 6'-8" HEADROOM FOR CATWALK (COORDINATE W/ TRUSS MANUF)
4. PROVIDE OVER FRAMING FOR GABLES

FINAL DRAWINGS

HEX 9 ARCHITECTS
5427 Woodside Drive
Gap, PA 17527
(717) 442-9034
(717) 283-0097 fx
An LLC Company
JOSEPH TURNOWCHYK, AIA, NCARB

STATE OF
NEW YORK
REGISTRATION #
036357-1

ALL CONTRACTORS ARE TO VERIFY ALL DIMENSIONS, FIELD CONDITIONS AND THE WORK OF OTHER TRADES BEFORE PROCEEDING WITH THEIR WORK.

This drawing is the exclusive property of HEX 9 ARCHITECTS and may not be reproduced in any form without written authorization from HEX 9 ARCHITECTS. Unauthorized reproduction or use of any or all parts of this drawing will constitute a violation of U.S. copyright laws.
COPYRIGHT © 2018 HEX 9 ARCHITECTS ALL RIGHTS RESERVED

REVISIONS

NUMBER	DATE	REVISED BY

DATE	FEBRUARY 6, 2018
DRAWN BY	CMT
PROJECT NUMBER	16114

NEW FACILITY FOR:
SLEEP INN & SUITES
635 ELMIRA ROAD
ITHACA, NEW YORK 14850

CHOICE PROPERTY I.D. # NY701

ROOF TRUSS TYPES

S302
DRAWING NUMBER

2018-06-14 & SLEEP INN - ITHACA, NY/PRODUCTION/A300 TRUSS TYPES.DWG 02-21-18 9:39 AM PRINTED BY: JGORON

GENERAL

1. THESE NOTES SERVE AS THE SPECIFICATIONS FOR THE WORK.
2. DO NOT SCALE DRAWINGS.
3. REFER TO THE PRE-ENGINEERED METAL BUILDING DRAWINGS FOR DESIGN LOAD CRITERIA.
4. FIELD DIMENSIONS
   A. THE PEMB DRAWINGS SHALL BE USED FOR LAYING OUT COLUMN CENTERS AND WALL LINES. ALL DIMENSIONS SHALL FIRST BE VERIFIED WITH THE ARCHITECTURAL DRAWINGS. LAYOUT SHALL BE CHECKED BEFORE WORK IS BEGUN.
5. CONTRACTOR SHALL BE RESPONSIBLE FOR COORDINATING MATERIALS, SCHEDULE AND DIMENSIONS BETWEEN SUB-CONTRACTORS.
6. CONTRACTOR SHALL BRING TO THE ATTENTION OF THE ARCHITECT ANY DIMENSIONAL DISCREPANCIES IN THE CONTRACT DRAWINGS BEFORE PROCEEDING WITH THE WORK.
7. CONTRACTOR SHALL LOCATE AND MARK ALL UNDERGROUND UTILITY LINES BEFORE STARTING WORK AND CALL PA ONE CALL 1-800-242-1776.
8. BURNING OR WELDING IN THE BUILDING IS PROHIBITED EXCEPT WHERE SPECIFICALLY PERMITTED BY THE ENGINEER.
9. IF CONDITIONS DISCLOSED DURING EXCAVATION DO NOT AGREE WITH INFORMATION SHOWN ON CONTRACT DRAWINGS, CONTRACTOR SHALL NOTIFY ARCHITECT OF THESE DISCREPANCIES.
10. FOR LOCATION AND SIZE OF SLEEVES, CONDUITS, AND OTHER MINOR OPENINGS, SEE OTHER DRAWINGS IN THIS PROJECT.
11. SECTIONS AND DETAILS SHOWN, WHILE DRAWN FOR SPECIFIC LOCATIONS, ARE INTENDED TO ESTABLISH THE GENERAL TYPES OF DETAILS TO BE USED THROUGHOUT.
12. THE ENGINEER'S REVIEW OF A SHOP DRAWING SHALL NOT RELIEVE THE CONTRACTOR OF HIS RESPONSIBILITY TO FOLLOW THE INTENT OF THE CONTRACT DRAWINGS.
13. CONTRACTOR SHALL USE ARCHITECTURAL DRAWINGS IN CONJUNCTION WITH THE STRUCTURAL SET TO PROPERLY PERFORM THE WORK.

FOUNDATIONS

1. FOUNDATIONS ARE DESIGNED FOR A NET BEARING PRESSURE OF 2,500 PSF. CONTRACTOR SHALL NOTIFY THE GEOTECHNICAL TESTING AGENCY WHEN FOOTINGS ARE OPENED.
2. GEOTECHNICAL TESTING AGENCY SHALL INSPECT AND REPORT ON ADEQUACY OF BEARING MATERIAL.
3. FOOTINGS SHOULD BE CAST ON THE SAME DAY IN WHICH EXCAVATION FOR THEM IS COMPLETED. IF PLACING OF CONCRETE IS DELAYED, FOOTING BOTTOM SHALL BE TRIMMED TO FIRM MATERIAL IMMEDIATELY BEFORE CASTING.
4. WHERE TRENCH BOTTOMS ARE DUG BELOW ADJACENT FOOTING BOTTOMS ON A SLOPE STEEPER THAN ONE VERTICAL TO TWO HORIZONTAL, THE TRENCH SHALL BE BACKFILLED WITH LEAN CONCRETE TO THE POINT WHERE THE STATED SLOPE CROSSES THE TRENCH.
5. FOOTINGS SHALL BE FORMED UNLESS OTHERWISE PERMITTED BY THE GEOTECHNICAL TESTING AGENCY.
6. BACKFILLING:
   A. BACKFILL SHALL BE CARRIED UP EVENLY ON BOTH SIDES OF WALL TO LOWER GRADE.
   B. BACKFILL SHALL BE PLACED IN MAXIMUM OF 8" LOOSE LIFT THICKNESS AND COMPACTED TO 95% OF MODIFIED PROCTOR.
7. STRUCTURAL FILL INCLUDING UNDER FOOTINGS:
   A. SHALL BE PLACED IN MAXIMUM OF 8" LOOSE LIFT THICKNESS AND COMPACTED TO 95% OF MODIFIED PROCTOR. TESTING SHALL BE AT EACH FOOTING FOR EACH LIFT.
   B. ON-SITE OR IMPORTED GRANULAR FILLS INCLUDING GW,GP,GM,SW,SP,ND,SM CLASSIFIED IN ACCORDANCE WITH THE UNIFIED SOIL CLASSIFICATION SYSTEM (USCS) AND WITHIN 2% OF OPTIMUM MOISTURE. FURTHERMORE, THE MATERIAL TO BE UTILIZED AS STRUCTURAL FILL SHOULD HAVE A PLASTICITY INDEX (PI) LESS THAN 2, SUBJECT TO FINAL APPROVAL BY THE GEOTECHNICAL TESTING AGENCY.

REINFORCED CONCRETE

1. CONCRETE CONSTRUCTION SHALL FOLLOW REQUIREMENTS OF ACI 301 "SPECIFICATIONS FOR STRUCTURAL CONCRETE.
2. REINFORCING FOR CONCRETE SHALL BE DETAILED, FABRICATED, AND PLACED IN ACCORDANCE WITH THE PROVISIONS SET FORTH BY THE AMERICAN CONCRETE INSTITUTE AND THE CRSI "MANUAL OF STANDARD PRACTICE."
3. REINFORCING STEEL SHALL CONFORM TO ASTM A615, GRADE 60. WELDED WIRE FABRIC SHALL CONFORM TO ASTM A185.
   A. LENGTH OF REINFORCING BARS SHOWN DOES NOT INCLUDE HOOKS.
4. CONCRETE SCHEDULE:

CONCRETE PROPERTIES SCHEDULE

USE	MINIMUM 28-DAY COMP. STRENGTH (PSI)	MAX WATER/CEMENT RATIO	SLUMP (BEFORE PLATICIZERS)	AIR-CONTENT (%)	REMARKS
FOOTINGS, PIERS	3,000	0.5	5" ± 1"	6 ± 1½	
SLABS-ON-GRADE	3,500	-	4" ± 1"	NATURAL	MIN. CEMENT CONTENT: 520 LBS/CY

5. CLEAR COVER FOR REINFORCING:
   FOOTINGS 3"
   PIER TIES 1½"
   SLABS-ON-GRADE (FROM TOP) 2"
6. REINFORCEMENT NOT SHOWN ON SECTIONS AND PLANS IS THE SAME AS THAT SHOWN IN SIMILAR SECTIONS AND AT SIMILAR LOCATIONS.
7. BETWEEN ALL SEPARATE CONCRETE POURS, PROVIDE DOWELS EQUAL IN SIZE AND NUMBER TO BARS IN THE DOWELED MEMBER.
8. PROVIDE SHOP DRAWINGS SHOWING FULL INFORMATION FOR STEEL PLACEMENT.
   A. REINFORCING STEEL DETAILER SHALL USE THE SAME SECTIONS AND MARKS AS SHOWN ON THE DESIGN DRAWINGS OR SHALL ADEQUATELY CROSS REFERENCE TO THE SATISFACTION OF THE ENGINEER.
   B. REINFORCING STEEL DETAILER SHALL DEVELOP ALL WALL ELEVATIONS AND SECTIONS WITH PERTINENT ELEVATIONS GIVEN, TO CLEARLY INDICATE THE POSITION OF THE REINFORCEMENT AND CONSTRUCTION JOINTS, WITHOUT REPRODUCING SECTIONS, PLANS, OR ELEVATIONS FROM THE DESIGN DRAWINGS.
10. SLABS ON GRADE:
   A. UNLESS OTHERWISE NOTED, CONSTRUCTION JOINTS IN SLABS ON GRADE SHALL BE KEYED AND DOWELS SHALL PASS THROUGH THE JOINT.
   B. PROVIDE 3/8" PREMOLDED JOINT FILLER WHERE SLAB ABUTS VERTICAL SURFACE.
11. SEE OTHER DRAWINGS IN THIS PROJECT FOR SIZE AND LOCATION OF EQUIPMENT PADS AND EMBEDDED ITEMS.
12. CONTRACTOR SHALL NOTIFY OWNER'S INSPECTION AGENCY BEFORE PLACEMENT OF CONCRETE TO ALLOW INSPECTION OF.
13. THE TESTING AGENCY SHALL INSPECT THE FORM WORK AND REINFORCING STEEL PLACEMENT FOR COMPLIANCE WITH THE CONTRACT DOCUMENTS AND SHOP DRAWINGS. THE AGENCY SHALL MONITOR ALL CONCRETE PLACEMENT FOR CONFORMANCE WITH ACI 301.
   A. SAMPLE FRESH CONCRETE IN ACCORDANCE WITH ASTM C172. MOLD TEST CYLINDERS IN ACCORDANCE WITH ASTM C31. A MINIMUM OF ONE SAMPLE (5 TEST CYLINDERS) SHALL BE CAST FOR EACH DAY'S POUR LESS THAN 25 CUBIC YARDS, PLUS ONE SAMPLE FOR EACH 50 CUBIC YARDS OR FRACTION THEREOF.
   B. THE AGENCY WILL MAKE ADDITIONAL TESTS OF IN-PLACE CONCRETE AT THE CONTRACTOR'S EXPENSE WHEN THE TEST RESULTS INDICATE SPECIFIED CONCRETE STRENGTHS HAVE NOT BEEN ATTAINED, AS DIRECTED BY THE STRUCTURAL ENGINEER.

CONDUIT AND PIPING IN CONCRETE SLABS

1. CONDUITS AND/OR PIPES SHALL NOT BE PLACED IN CONCRETE SLABS WITHOUT THE PRIOR APPROVAL OF THE ARCHITECT. PREPARE A SUBMITTAL DETAILING THE NUMBER, SIZE, SPACING AND LAYOUT OF THE PROPOSED CONDUIT AND/OR PIPE RUNS AS WELL AS THE MATERIAL SPECIFICATIONS FOR THE CONDUIT OR PIPE. ADHERE TO THE FOLLOWING LIMITS IN PLANNING THE CONDUIT EMBEDMENTS:
   A. MAXIMUM OUTSIDE DIAMETER OF CONDUIT OR PIPE: 1/4 THE DEPTH OF THE SLAB THICKNESS.
   B. MINIMUM C-C CONDUIT SPACING: 6 TIMES THE OUTSIDE DIAMETER OF THE CONDUIT.
   C. CONDUITS SHALL BE FIRMLY SUPPORTED AT THE MID-DEPTH OF THE SLAB AND SHALL BE WIRED INTO PLACE. IN NO CIRCUMSTANCES ARE CONDUITS TO BE PLACED IN CONTACT WITH THE CONCRETE REINFORCEMENT.
   D. USE OF ALUMINUM CONDUIT OR PIPE FOR EMBEDMENT IN CONCRETE IS NOT PERMITTED.

MASONRY

1. MASONRY SHALL BE CONSTRUCTED IN ACCORDANCE WITH ACI 530.1.
2. ALL CONCRETE MASONRY UNITS SHALL CONFORM TO ASTM C90.
3. COMPRESSIVE STRENGTH (F'M) OF ALL CONCRETE UNIT MASONRY ASSEMBLIES SHALL BE 1500 PSI AT 28 DAYS.
4. CONCRETE UNIT MASONRY STRENGTH: COMPRESSIVE STRENGTH OF CONCRETE UNIT MASONRY (F'M) MAY BE DETERMINED EITHER BY STRENGTH OR INDIVIDUAL UNITS, GROUT STRENGTH, AND MORTAR TYPE IN ACCORDANCE WITH ACI 530.1 ARTICLE 1.4.B.2.B OR BY PRISM TEST METHOD IN ACCORDANCE WITH ACI 530.1 ARTICLE 1.4.B.3. SUBMIT DATA AND TEST RESULTS TO VALIDATE MASONRY SYSTEM STRENGTH VIA ONE OF THE TWO REFERENCED METHODS.
5. MORTAR FOR USE BELOW GRADE SHALL CONFORM TO ASTM C270, TYPE M OR N.
6. MORTAR FOR USE ABOVE GRADE SHALL CONFORM TO ASTM C270, TYPE S.
7. LAY CMU IN PIERS, COLUMNS, PEDESTALS AND PARTIALLY-GROUTED WALLS WITH FACE SHELLS AND WEBS FULLY BEDDED IN MORTAR. ALIGN VERTICAL CELLS TO BE GROUTED. FULLY-GROUTED WALLS MAY BE BEDDED WITH FACE SHELLS ONLY.
8. GROUT FOR MASONRY SHALL CONFORM TO ASTM C476. GROUT SOLID ALL BLOCK CELLS BELOW SLABS-ON-GRADE, AT BEAM, LINTEL AND JOIST BEARINGS, AT BOND BEAMS, AT CHANGES IN WALL THICKNESS, AND AT VERTICAL REINFORCING.
9. INSTALL LADDER-TYPE JOINT REINFORCEMENT AT 16" O.C. DISCONTINUE JOINT REINFORCING AT CONTROL JOINTS.
10. LAP SLICES FOR REINFORCING BARS SHALL BE A MINIMUM OF 48 BAR DIAMETERS.

PRE-ENGINEERED WOOD TRUSSES:

DESIGN, MATERIALS AND WORKMANSHIP SHALL COMPLY WITH CURRENT EDITIONS OF THE FOLLOWING CODES AND STANDARDS:
"NATIONAL DESIGN SPECIFICATION FOR WOOD CONSTRUCTION" WITH SUPPLEMENT, NATIONAL FOREST PRODUCTS ASSOCIATION.

DESIGN SPECIFICATIONS FOR METAL PLATE CONNECTED WOOD TRUSSES, TRUSS PLATE INSTITUTE.

DESIGN LIVE LOAD: TOP CHORD: ROOF 35 PSF

DESIGN SUPERIMPOSED DEAD LOADS: TOP CHORD: ROOF 6 PSF
BOTTOM CHORD: ROOF: 9 PSF

TRUSSES SHALL BE DESIGNED FOR DRIFTED AND UNBALANCED SNOW LOADS AND WIND UPLIFT LOADS AS REQUIRED.

DESIGN OF PREFABRICATED TRUSSES, TRUSS BRACING AND CONNECTIONS SHALL BE THE RESPONSIBILITY OF THE TRUSS MANUFACTURER. SHOP DRAWINGS AND DESIGN CALCULATIONS SHALL BE PREPARED AND SEALED BY A PROFESSIONAL ENGINEER LICENSED IN PENNSYLVANIA. SUBMIT CALCULATIONS AND ERECTION DRAWINGS FOR REVIEW.

PERMANENT BRACING SHALL BE DESIGNED AND DETAILED BY THE TRUSS MANUFACTURER.

TEMPORARY BRACING TO BE PROVIDED BY THE CONTRACTOR IN ACCORDANCE WITH "BRACING WOOD TRUSSES COMMENTARY AND RECOMMENDATIONS", TRUSS PLATE INSTITUTE PUBLICATION BWT-76.

REQUIRED SPECIAL INSPECTIONS PER 2015 INTERNATIONAL BUILDING CODE

MATERIAL	ITEM	CONTINUOUS	PERIODIC	IBC SECT.	STANDARD REF.	REMARKS
SOILS	VERIFY MATERIALS BELOW FOOTING ARE ADEQUATE TO ACHIEVE THE DESIGN BEARING CAPACITY	-	X	1705.6		
	PERFORM CLASSIFICATION AND TESTING OF CONTROLLED MATERIAL	-	X	1705.6		
	VERIFY USE OF MATERIALS, DENSITIES AND LIFT THICKNESSES DURING PLACEMENT & COMPACTION OF FILL	X	-	1705.6		NOT REQ'D IF FILL HEIGHT < 12"
STEEL	MATERIAL VERIFICATION OF HIGH-STRENGTH BOLTS, NUTS AND WASHERS	-	X	-	AISC 360 A3.3	
	INSPECTION OF HIGH-STRENGTH BOLTED CONNECTIONS	-	X	1705.2.1	AISC 360 N5.6	
	INSPECTION OF STEEL FRAME JOINT DETAILS FOR COMPLIANCE w/ CONSTRUCTION DOCUMENTS	-	X	1705.2.1	-	
2	INSPECTION OF SINGLE PASS FILLET WELDS < 5/16"		X	1709.3.1	AWSD1.1	

NOTES:
1. THIS TABLE IDENTIFIES THE SPECIAL INSPECTIONS REQUIRED BY THE 2015 INTERNATIONAL BUILDING CODE (IBC). REFER TO THE GENERAL NOTES FOR REQUIRED QUALITY CONTROL INSPECTIONS WHICH MAY BE IN ADDITION TO THE SPECIAL INSPECTIONS.
2. THE ITEMS SHALL BE INSPECTED BY A CERTIFIED SPECIAL INSPECTOR FROM AN ESTABLISHED TESTING AGENCY. THE TESTING AGENCY SHALL SEND COPIES OF ALL STRUCTURAL TESTING AND INSPECTION REPORTS DIRECTLY TO THE ENGINEER, CONTRACTOR AND BUILDING OFFICIAL. ANY CONSTRUCTION WHICH FAILS TO MEET THE PROJECT SPECIFICATIONS AND IBC REQUIREMENTS SHALL IMMEDIATELY BE BROUGHT TO THE ATTENTION OF THE CONTRACTOR FOR CORRECTION AND ENGINEER.
3. CONTINUOUS INSPECTION MEANS THAT THE SPECIAL INSPECTOR SHALL BE ON SITE AT ALL TIMES OBSERVING THE WORK REQUIRING SPECIAL INSPECTION. PERIODIC INSPECTION MEANS TIAT THE SPECIAL INSPECTOR IS ON SITE AT THE TIME INTERVALS NECESSARY TO CONFIRM COMPLIANCE OF THE THE WORK REQUIRING SPECIAL INSPECTION.

2

SECTION 05120 - STRUCTURAL STEEL
PART 1 - GENERAL
1.1 SECTION REQUIREMENTS
   A. SUBMITTALS: PRODUCT DATA, SHOP DRAWINGS, WELDING PROCEDURE SPECIFICATIONS (WPSS) AND MILL TEST REPORTS. SHOP DRAWINGS SHALL BE SEALED BY A LICENSED STRUCTURAL ENGINEER
   B. COMPLY WITH APPLICABLE PROVISIONS OF THE FOLLOWING:
      1. AISC 303 - 10
      2. AISC 360 - 10
      3. RCSC'S "SPECIFICATION FOR STRUCTURAL JOINTS USING ASTM A 325 OR A 490 BOLTS."

PART 2 - PRODUCTS
2.1 STRUCTURAL STEEL
   A. W-SHAPES: **ASTM A 992/A 992M**.
   B. CHANNELS, ANGLES SHAPES: **ASTM A 36/A 36M**
   C. PLATE AND BAR: **ASTM A 36/A 36M**
   D. COLD-FORMED HOLLOW STRUCTURAL SECTIONS: ASTM A 500, **GRADE B**, STRUCTURAL TUBING.
   E. STEEL PIPE: ASTM A 53, TYPE E OR S, GRADE B.
2.2 ACCESSORIES
   A. HIGH-STRENGTH BOLTS, NUTS, AND WASHERS: ASTM A 325, TYPE 1, HEAVY-HEX STEEL STRUCTURAL BOLTS;
   B. ANCHOR RODS: ASTM F 1554, GRADE 36.
      1. CONFIGURATION: HOOKED UNLESS NOTED OTHERWISE.
      2. NUTS: ASTM A 563 (ASTM A 563M) HEX CARBON STEEL.
      3. PLATE WASHERS: ASTM A 36/A 36M CARBON STEEL.
      4. WASHERS: ASTM F 436 (ASTM F 436M), TYPE 1, HARDENED CARBON STEEL.
   C. PRIMER: FABRICATOR'S STANDARD LEAD- AND CHROMATE-FREE, NONASPHALTIC, RUST-INHIBITING PRIMER.
   D. GROUT: ASTM C 1107, NONMETALLIC, SHRINKAGE RESISTANT, FACTORY PACKAGED.
2.3 FABRICATION
   A. STRUCTURAL STEEL: FABRICATE AND ASSEMBLE IN SHOP TO GREATEST EXTENT POSSIBLE. FABRICATE ACCORDING TO AISC'S "CODE OF STANDARD PRACTICE FOR STEEL BUILDINGS AND BRIDGES" AND AISC 360.
   B. WELD CONNECTIONS: COMPLY WITH AWS D1.1/D1.1M FOR TOLERANCES, APPEARANCES, WELDING PROCEDURE SPECIFICATIONS, WELD QUALITY, AND METHODS USED IN CORRECTING WELDING WORK.
   C. SHOP PRIMING: PREPARE SURFACES ACCORDING TO SSPC-SP 2, "HAND TOOL CLEANING"; OR SSPC-SP 3, "POWER TOOL CLEANING." SHOP PRIME STEEL TO A DRY FILM THICKNESS OF AT LEAST 1.5 MILS (0.038 MM). DO NOT PRIME SURFACES TO BE EMBEDDED IN CONCRETE OR MORTAR OR TO BE FIELD WELDED.

PART 3 - EXECUTION
3.1 ERECTION
   A. SET STRUCTURAL STEEL ACCURATELY IN LOCATIONS AND TO ELEVATIONS INDICATED AND ACCORDING TO AISC 303 AND AISC 360.
   B. BASE, BEARING AND LEVELING PLATES: CLEAN CONCRETE- AND MASONRY-BEARING SURFACES OF BOND-REDUCING MATERIALS, AND ROUGHEN SURFACES PRIOR TO SETTING PLATES. CLEAN BOTTOM SURFACE OF PLATES.
      1. SET PLATES FOR STRUCTURAL MEMBERS ON WEDGES, SHIMS, OR SETTING NUTS AS REQUIRED.
      2. WELD PLATE WASHERS TO TOP OF BASE PLATE.
      3. **SNUG-TIGHTEN** ANCHOR RODS AFTER SUPPORTED MEMBERS HAVE BEEN POSITIONED AND PLUMBED. DO NOT REMOVE WEDGES OR SHIMS BUT, IF PROTRUDING, CUT OFF FLUSH WITH EDGE OF PLATE BEFORE PACKING WITH GROUT.
      4. PROMPTLY PACK GROUT SOLIDLY BETWEEN BEARING SURFACES AND PLATES SO NO VOIDS REMAIN. NEATLY FINISH EXPOSED SURFACES; PROTECT GROUT AND ALLOW TO CURE.
   C. ALIGN AND ADJUST VARIOUS MEMBERS FORMING PART OF COMPLETE FRAME OR STRUCTURE BEFORE PERMANENTLY FASTENING. BEFORE ASSEMBLY, CLEAN BEARING SURFACES AND OTHER SURFACES THAT WILL BE IN PERMANENT CONTACT WITH MEMBERS. PERFORM NECESSARY ADJUSTMENTS TO COMPENSATE FOR DISCREPANCIES IN ELEVATIONS AND ALIGNMENT.
   D. DO NOT USE THERMAL CUTTING DURING ERECTION UNLESS APPROVED BY STRUCTURAL ENGINEER. FINISH THERMALLY CUT SECTIONS WITHIN SMOOTHNESS LIMITS IN AWS D1.1/D1.1M.
   E. HIGH-STRENGTH BOLTS: INSTALL HIGH-STRENGTH BOLTS ACCORDING TO RCSC'S "SPECIFICATION FOR STRUCTURAL JOINTS USING ASTM A 325 OR A 490 BOLTS" FOR TYPE OF BOLT AND TYPE OF JOINT SPECIFIED.
      1. JOINT TYPE: **SNUG TIGHTENED**
   F. WELD CONNECTIONS: COMPLY WITH AWS D1.1/D1.1M FOR TOLERANCES, APPEARANCES, WELDING PROCEDURE SPECIFICATIONS, WELD QUALITY, AND METHODS USED IN CORRECTING WELDING WORK.

DESIGN LOADS 1

A. ROOF DEAD LOADS
   ROOF ASSEMBLY: 10 PSF
   MECHANICAL: 5 PSF
   MINIMUM ROOF DEAD LOAD: 15 PSF
B. ROOF LIVE LOAD (MINIMUM) 30 PSF
C. ROOF SNOW LOAD
   GROUND SNOW LOAD: 40 PSF
   SNOW IMPORTANCE FACTOR (1): 1.0
   SNOW EXPOSURE FACTOR (Ce): 1.0
   SNOW THERMAL FACTOR (C_t): 1.0
D. WIND LOAD
   ULTIMATE WIND SPEED: 115 MPH
   WIND EXPOSURE CATEGORY: B
E. EARTHQUAKE LOAD (ANALYSIS BASED ON EQUIVALENT LATERAL FORCE METHOD)
   SHORT PERIOD SPECTRAL ACCELERATION (S_s): 0.118
   1 SECOND PERIOD SPECTRAL ACCELERATION (S_1): 0.045
   SEISMIC SITE CLASS D
   SEISMIC SITE COEFFICIENT (Fa) 1.6
   SEISMIC USE GROUP 1
   SEISMIC DESIGN CATEGORY B
   SEISMIC FORCE RESISTING SYSTEM WOOD FRAMED SHEAR WALLS
   RESPONSE MODIFICATIONS FACTOR: 6.5
   SEISMIC IMPORTANCE FACTOR (1): 1.0
F. FLOOR DEAD LOAD: 10 PSF
G. FLOOR LIVE LOAD: GUEST ROOMS: 40 PSF
   CORRIDORS & PUBLIC AREAS: 100 PSF

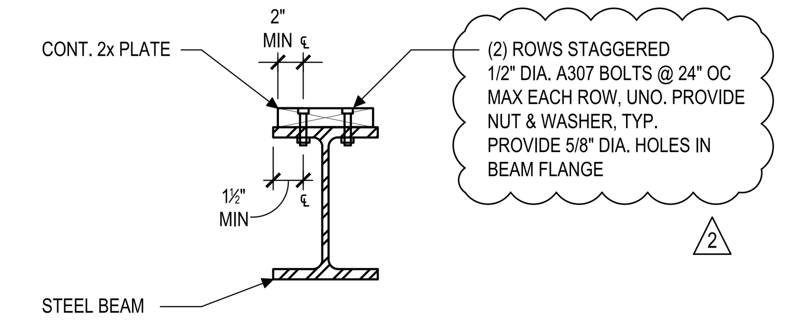

1 S401 BEAM BEARING PLATE DETAIL
SCALE: 1"=1'-0"

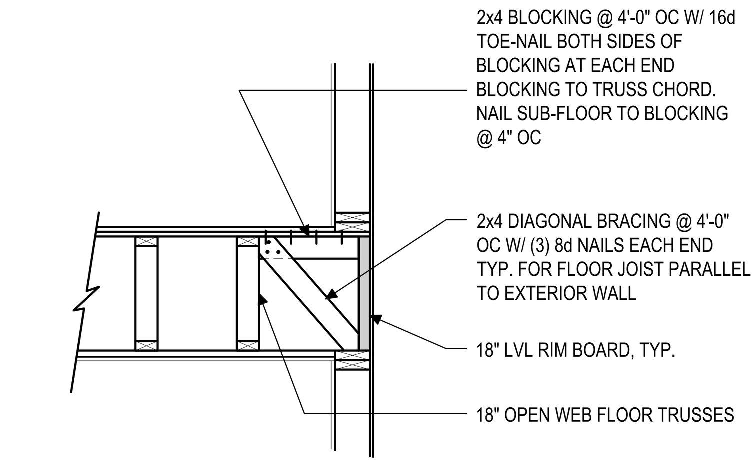

2 S401 FLOOR JOIST PARALLEL TO EXTERIOR WALL
SCALE: 1/2"=1'-0"

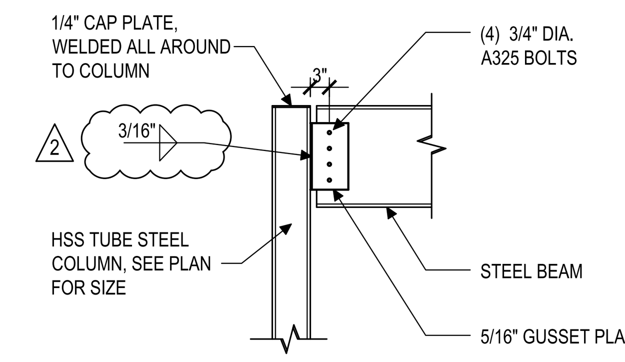

3 S401 COLUMN/BEAM CONNECTION DETAIL
SCALE: 1/2"=1'-0"

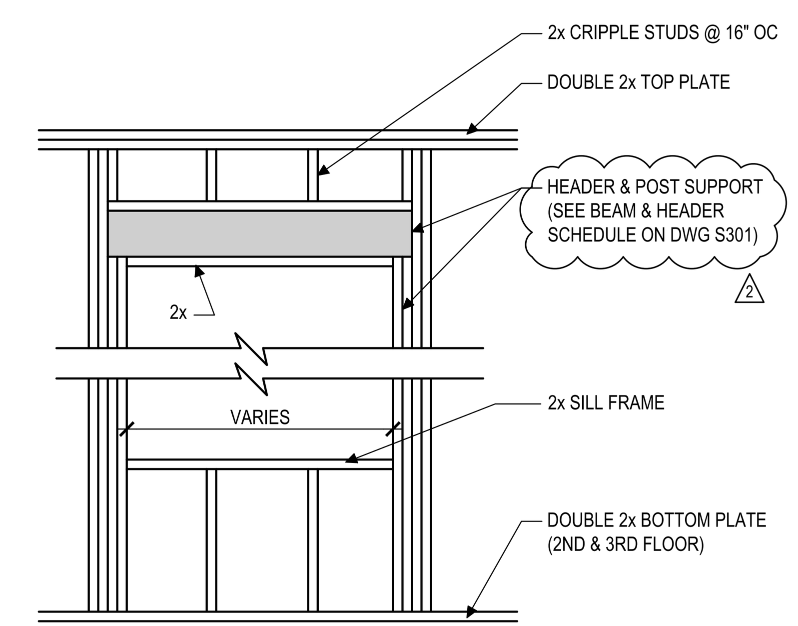

4 S401 TYPICAL LOAD BEARING OPENING (TYPICAL ALL OPENINGS) 2
SCALE: 1/2"=1'-0"

POST SCHEDULE REMOVED. FOR POSTS SIZES, SEE SCHEDULES ON DWG S301 2

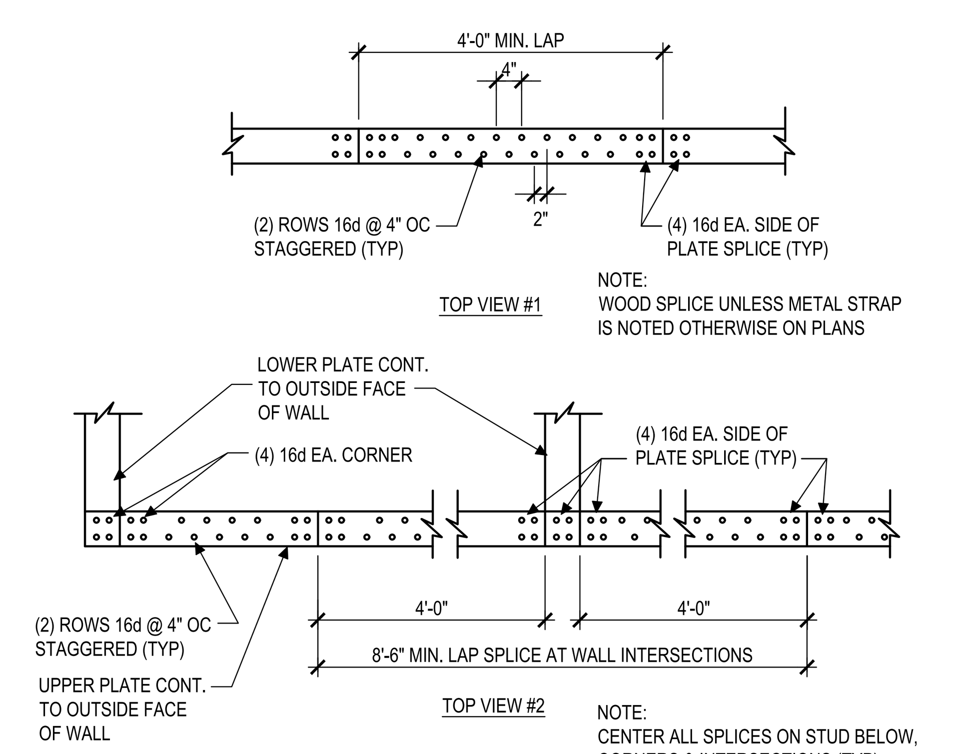

5 S401 TYPICAL DOUBLE TOP PLATE SPLICE DETAIL - ALL SHEAR WALLS 1
SCALE: 1/2"=1'-0"

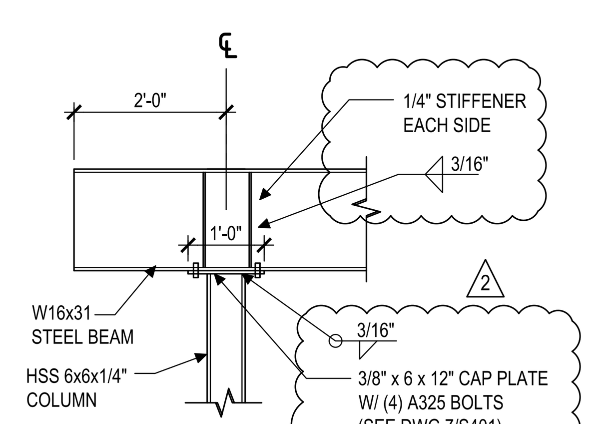

6 S401 BEAM CANTILEVER CONNECTION DETAIL
SCALE: 1/2"=1'-0"

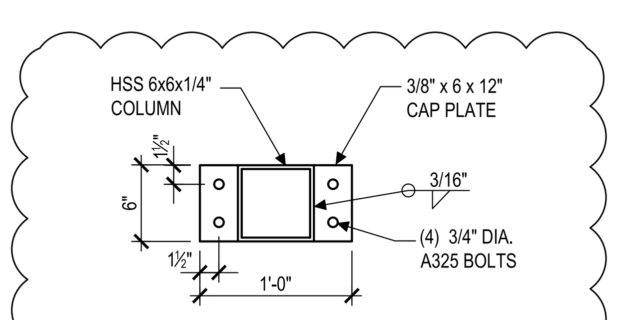

7 S401 CAP PLATE DETAIL 2
SCALE: 1"=1'-0"

HEX 9 ARCHITECTS
5427 Woodside Drive
Gap, PA 17527
(717) 442-9034
(717) 283-0097 fx
An LLC Company
JOSEPH TURNOWCHYK, AIA, NCARB

STATE OF NEW YORK REGISTRATION # 036357-1

ALL CONTRACTORS ARE TO VERIFY ALL DIMENSIONS, FIELD CONDITIONS AND THE WORK OF OTHER TRADES BEFORE PROCEEDING WITH THEIR WORK.

This drawing is the exclusive property of HEX 9 ARCHITECTS and may not be reproduced in any form without written authorization from HEX 9 ARCHITECTS. Unauthorized reproduction or use of any or all parts of this drawing will constitute a violation of U.S. copyright laws.
COPYRIGHT © 2018 HEX 9 ARCHITECTS ALL RIGHTS RESERVED

REVISIONS

NUMBER	DATE	REVISED BY
1	6-01-2018	RN
2	7-10-2018	RN

DATE	FEBRUARY 6, 2018
DRAWN BY	CMT
PROJECT NUMBER	16114

NEW FACILITY FOR:
SLEEP INN & SUITES
CHOICE PROPERTY I.D. # NY701
635 ELMIRA ROAD
ITHACA, NEW YORK 14850
STRUCTURAL SPECIFICATIONS & DETAILS

FINAL DRAWINGS

S401
DRAWING NUMBER

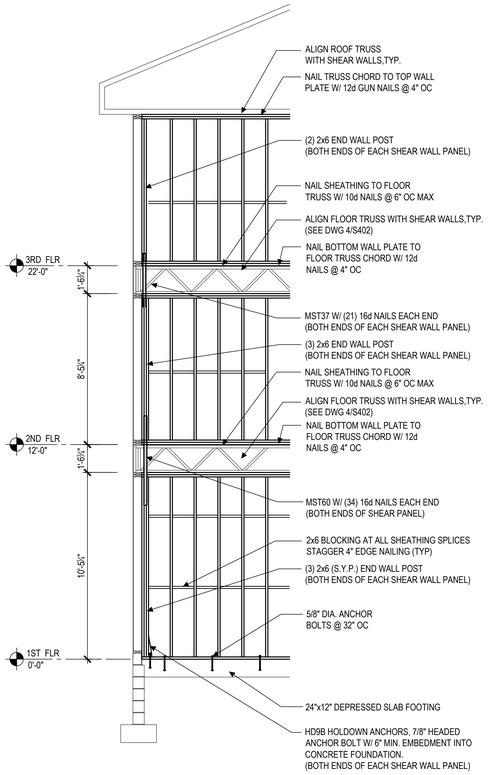

5 S402 **TYP. INTERIOR SHEAR WALL PARTIAL ELEVATION**
SCALE: 1/4" = 1'-0"

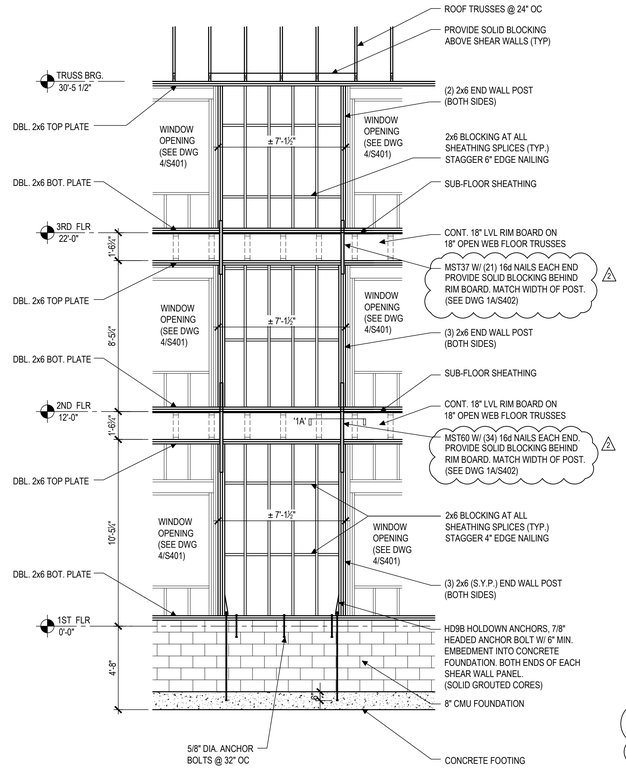

1 S402 **TYP. EXTERIOR SHEAR WALL ELEVATION**
SCALE: 1/4" = 1'-0"
(SEE DWG 2/S402 FOR SHEATHING SPLICES)

SHEARWALL SCHEDULE

LOCATION	FLOORS	WALL SHEATHING	EDGE NAILING	BLOCKING REQUIREMENTS	MUD SILL FASTENERS	1ST FLR HOLDOWN
INTERIOR WALLS	1ST FLR	(1) LAYER ONE SIDE OF WALL- 7/16" OSB SHEATHING BLOCKED	4" OC	NOMINAL 2" BLOCKING AT ALL PANEL JOINTS WHERE REQUIRED. SOLID BLOCKING BETWEEN JOIST AT STRAPPING. ALSO FOR THE ENTIRE WALL LENGTH WHERE FLOOR JOISTS ARE PARALLEL TO SHEAR WALL	5/8" DIA. ANCHOR BOLTS @ 32" OC	HD9B HOLDOWN ANCHORS, 7/8" BOLT W/ 6" MIN. EMBEDMENT INTO CONCRETE FOUNDATION. BOTH ENDS OF EACH SHEAR WALL PANEL. (SEE DWG 5/S101) 2
	2ND FLR 3RD FLR	(1) LAYER ONE SIDE OF WALL- 7/16" OSB SHEATHING BLOCKED	6" OC		N/A	N/A
EXTERIOR WALLS	1ST FLR	(1) LAYER ONE SIDE OF WALL- 7/16" OSB SHEATHING BLOCKED	4" OC		5/8" DIA. ANCHOR BOLTS @ 32" OC	HD9B HOLDOWN ANCHORS, 7/8" BOLT W/ 6" MIN. EMBEDMENT INTO CONCRETE FOUNDATION. BOTH ENDS OF EACH SHEAR WALL PANEL. (SEE DWG 1/S402) 2
	2ND FLR 3RD FLR	(1) LAYER ONE SIDE OF WALL- 7/16" OSB SHEATHING BLOCKED	6" OC		N/A	N/A
NOTES	1. ALL STUDS, PLATES & BLOCKING SHALL BE 2x NO. 2 SPF OR DF (U.N.O.) 2. MUD SILLS SHALL BE P/T 2x NO. 2 SYP 3. PLYWOOD NAILS SHALL BE 8d (U.N.O.) GYP BOARD NAILS SHALL BE 6d COOLER (U.N.O.) 4. DRYWALL SCREWS ARE ALLOWED SUBSTITUTION FOR 6d NAILS					

SHEARWALL END WALL POST & END WALL TIE

FLOOR	END WALL POST	FLOOR TO FLOOR STRAP
3RD FLR	(2) BUNDLED STUD EACH END	MST37 W/ (21) 16d NAILS EACH END. PROVIDE BLOCKING IN JOIST CAVITY AT RIM BOARD (SEE DWG 1A/S402)
2ND FLR	(3) BUNDLED STUD EACH END	MST60 W/ (34) 16d NAILS EACH END. PROVIDE BLOCKING IN JOIST CAVITY AT RIM BOARD (SEE DWG 1A/S402)
1ST FLR	(3) BUNDLED STUD (S.Y.P.) EACH END	N/A 2

POSTS & STRAPS TO BE INSTALLED AT BOTH ENDS OF EACH SHEAR WALL PANEL

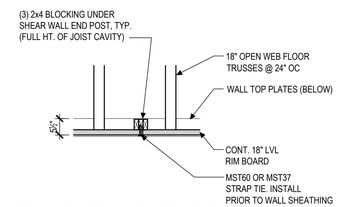

1A S402 **STRAP TIE BLOCKING AT RIM BOARD**
SCALE: 1/2"=1'-0"
2

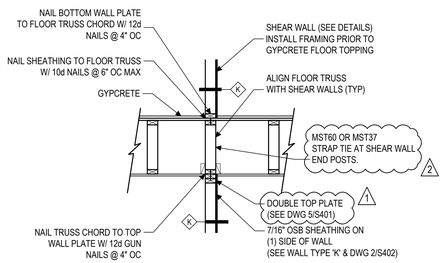

4 S402 **FLOOR TRUSS DETAIL @ INTERIOR SHEAR WALL**
SCALE: 1/2"=1'-0"
NOTE: ROOF TRUSS CONNECTION IS SIMILAR

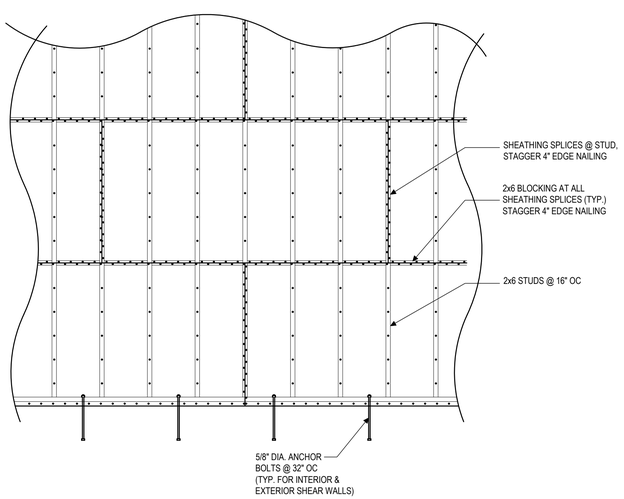

2 S402 **SHEATHING SPLICE DETAIL @ SHEAR WALLS**
SCALE: 1/2" = 1'-0"

NAILING SCHEDULE

LOCATION	ROOF	FLOOR
DIAPHRAM BOUNDARY	10d @ 6" OC	10d @ 6" OC
PANEL EDGES	10d @ 6" OC	10d @ 6" OC
CONTINUOUS PANEL JOINT	10d @ EACH JOIST	10d @ EACH JOIST
IN FIELD	PARALLEL TO JOIST - 10d @ 12" OC PERP. TO JOIST - 10d @ EA. JOIST	PARALLEL TO JOIST - 10d @ 12" OC PERP. TO JOIST - 10d @ EA. JOIST

ROOF SHEATHING TO BE MIN. 5/8" EXT. GRADE CDX PLYWOOD

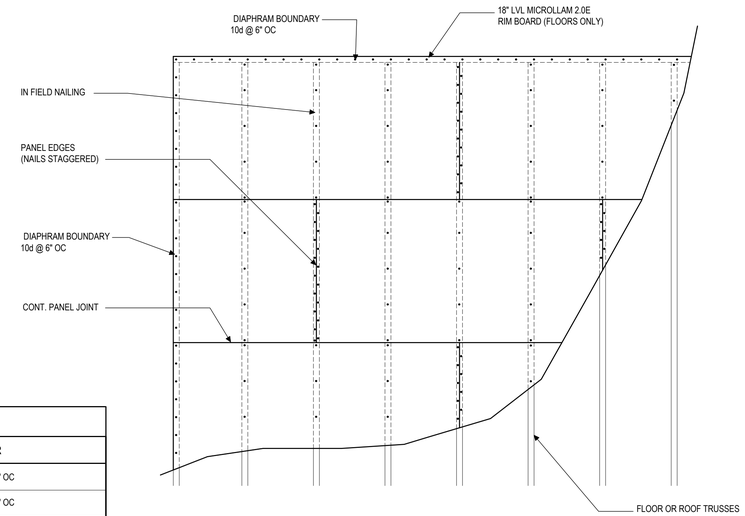

3 S402 **FLOOR & ROOF SHEATHING NAILING DETAIL**
SCALE: 1/2" = 1'-0"

1 SEE STRUCTURAL DESIGN LOADS ON SHEET S401

FINAL DRAWINGS

HEX 9 ARCHITECTS
5407 Woodside Drive
Gap, PA 17527
(717) 442-9034
(717) 283-0097 fx
An LLC Company
JOSEPH TURNOWCHYK, AIA, NCARB

STATE OF NEW YORK REGISTRATION # 036357-1

ALL CONTRACTORS ARE TO VERIFY ALL DIMENSIONS, FIELD CONDITIONS AND THE WORK OF OTHER TRADES BEFORE PROCEEDING WITH THEIR WORK.

This drawing is the exclusive property of HEX 9 ARCHITECTS and may not be reproduced in any form without written authorization from HEX 9 ARCHITECTS. Unauthorized reproduction or use of any or all parts of this drawing will constitute a violation of U.S. copyright laws.
COPYRIGHT © 2018 HEX 9 ARCHITECTS ALL RIGHTS RESERVED

REVISIONS

NUMBER	DATE	REVISED BY
1	6-01-2018	RN
2	7-10-2018	RN

DATE	FEBRUARY 6, 2018
DRAWN BY	RN
PROJECT NUMBER	16114

NEW FACILITY FOR:
SLEEP INN & SUITES CHOICE PROPERTY I.D. # NY701
635 ELMIRA ROAD
ITHACA, NEW YORK 14850
STRUCTURAL DETAILS

S402
DRAWING NUMBER

2018-16114 SLEEP INN - ITHACA, NY\PRODUCTION\S402 DETAILS.DWG 07-12-18 5:15 AM PRINTED BY: JSTORK